ORDER NO. AD9502043C8

Service Manual

Compact Disc Changer

SL-PD687

Colour

(K) ... Black Type

Area

Suffix for Model No.	Area	Colour
(E)	Europe.	(K)
(EB)	Great Britain.	
(EG)	Germany and Italy.	
(GC)	Asia, Latin America, Middle Near east and Africa.	
(GN)	Oceania.	

RAE0113Z MECHANISM SERIES

※
- Technics (or Panasonic) developed the world's first MASH type DAC and ADC. MASH technology was invented by NTT (LSI Labs).
- MASH is a trademark of NTT.

SPECIFICATIONS

AUDIO

No. of channels	2 (left and right, stereo)
Frequency response	2–20,000 Hz, ±1 dB
Output voltage	2 V (at 0 dB)
Dynamic range	92 dB
S/N	100 dB
Total harmonic distortion	0.007 % (1 kHz, 0 dB)
Wow and flutter	Below measurable limit
DA converter	MASH (1 bit)
Output impedance	Approx. 1 kΩ
Load impedance	More than 10 kΩ

PICKUP

Wavelength	780 nm

GENERAL

Power consumption	
For (E, EB, EG, GN) areas.:	12 W
For (GC) area.:	14 W
Power supply	
For (E, EB, EG, GN) areas.:	AC 50/60 Hz, 230–240 V
For (GC) area.:	AC 50/60 Hz, 110 V/127 V/220 V/230–240 V
Dimensions (W × H × D)	430 × 125 × 370 mm (16-15/16″ × 4-15/16″ × 14-9/16″)
Weight	4.6 kg (10.1 lb.)

Note:

Disign and specifications are subject to change without notice.
Weight and dimensions are approximate.

CONTENTS

	Page
PRECAUTION OF LASER DIODE	2
ACCESSORIES	3
CONNECTIONS	3
REPLACEMENT OF THE FOOT	3
CAUTION FOR AC MAINS LEAD	4
FRONT PANEL CONTROLS	5
CAUTIONS CONCERNING THE MOVING OF THIS UNIT	5
BASIC OPERATIONS	6, 7
SELF-DIAGNOSTIC DISPLAY FUNCTION	8
HANDLING PRECAUTIONS FOR TRAVERSE DECK	9
DISASSEMBLY INSTRUCTIONS	10~18
HOW TO CHECK THE MAIN AND SERVO P.C.B.	19, 20
OPERATING THE UNIT WITHOUT THE FRONT PANEL ASS'Y	21
AUTOMATIC ADJUSTMENT RESULTS DISPLAY FUNCTION (SELF-CHECK FUNCTION)	22
DIGITAL SERVO SYSTEM	23
TROUBLESHOOTING GUIDE	24, 25
MEASUREMENTS AND ADJUSTMENTS	26, 27
TERMINAL GUIDE	28~31
BLOCK DIAGRAM	32~34
SCHEMATIC DIAGRAM	35~40
PRINTED CIRCUIT BOARDS	41~44
WIRING CONNECTION DIAGRAM	45
REPLACEMENT PARTS LIST	46, 47, 51, 53
LOADING MECHANISM PARTS	48
CABINET PARTS LOCATION	49, 50
RESISTORS AND CAPACITORS	52, 53
PACKAGING	54

Technics®

© 1995 Matsushita Electric Industrial Co., Ltd. All rights reserved. Unauthorized copying and distribution is a violation of law.

⚠ WARNING

This service information is designed for experienced repair technicians only and is not designed for use by the general public. It does not contain warnings or cautions to advise non-technical individuals of potential dangers in attempting to service a product. Products powered by electricity should be serviced or repaired only by experienced professional technicians. Any attempt to service or repair the product or products dealt with in this service information by anyone else could result in serious injury or death.

PRECAUTION OF LASER DIODE

CAUTION: This product utilizes a laser diode with the unit turned "on", invlsible laser radiation is emitted from the pickup lens.
Wave length: 780nm
Maximum output radiation power from pickup: 100μW/VDE

Laser radiation from the pickup lens is safety level, but be sure the followings:

1. Do not disassemble the optical pickup unit, since radiation from exposed laser diode is dangerous.
2. Do not adjust the variable resistor on the pickup unit. It was already adjusted.
3. Do not look at the focus lens using optical instruments.
4. Recommend not to look at pickup lens for a long time.

ACHTUNG: Dieses Produkt enthält eine Laserdiode. Im eingeschalteten Zustand wird unsichtbare Laserstrahlung von der Lasereinheit abgestrahlt.

Wellenlänge: 780nm
Maximale Strahlungsleistung der Lasereinheit: 100μW/VDE

Die Strahlung an der Lasereinheit ist ungefährlich, wenn folgende Punkte beachtet werden:

1. Die Lasereinheit nicht zerlegen, da die Strahlung an der freigelegten Laserdiode gefährlich ist.
2. Den werkseitig justierten Einstellregler der Lasereinhit nicht verstellen.
3. Nicht mit optischen Instrumenten in die Fokussierlines blicken.
4. Nicht über längere Zeit in die Fokussierlinse blicken.

ADVARSEL: I dette a apparat anvendes laser.

- **Use of caution label**

DANGER	INVISIBLE LASER RADIATION WHEN OPEN. AVOID DIRECT EXPOSURE TO BEAM.
ADVARSEL	USYNLIG LASERSTRÅLING VED ÅBNING, NÅR SIKKERHEDSAFBRYDERE ER UDE AF FUNKTION UNDGÅ UDSÆTTELSE FOR STRÅLING.
VARO!	AVATTAESSA JA SUOJALUKITUS OHITETTAESSA OLET ALTTIINA NÄKYMÄTÖNTÄ LASERSÄTEILYLLE. ÄLÄ KATSO SÄTEESEEN.
VARNING	OSYNLIG LASERSTRÅLNING NÄR DENNA DEL ÄR ÖPPNAD OCH SPÄRREN ÄR URKOPPLAD. BETRAKTA EJ STRÅLEN.
ADVARSEL	USYNLIG LASERSTRÅLING NÅR DEKSEL ÅPNES OG SIKKERHEDSLÅS BRYTES. UNNGÅ EKSPONERING FOR STRÅLEN.
VORSICHT	UNSICHTBARE LASERSTRAHLUNG, WENN ABDECKUNG GEÖFFNET. NICHT DEM STRAHL AUSSETZEN. RQLS0104

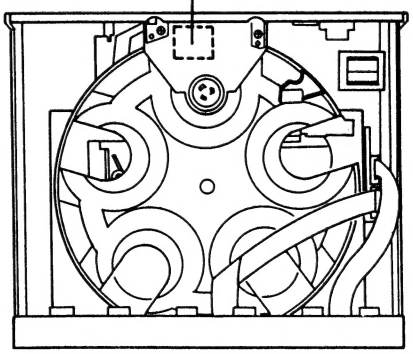

CAUTION!
THIS PRODUCT UTILIZES A LASER.
USE OF CONTROLS OR ADJUSTMENTS OR PERFORMANCE OF PROCEDURES OTHER THAN THOSE SPECIFIED HEREIN MAY RESULT IN HAZARDOUS RADIATION EXPOSURE.

■ ACCESSORIES

AC power supply cord ..... 1 pc.
[VJA0733 (EB)] [RJA0036-K (GN)] [RJA0019-2K (E, EG, GC)]

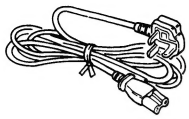
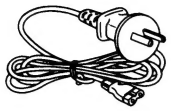
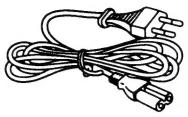

Stereo connection cable ..... 1 pc.
[SJP2249-3]

Power plug adaptor ..... 1 pc.
[SJP5213-2 (GC)]

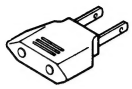

■ CONNECTIONS

Before connecting the changer to your audio system, make sure that the power of the changer and all other system components is turned off.

- Although the figure below shows the AC power supply cord being connected to a household AC outlet, if the amplifier (or receiver) is equipped with an AC outlet, connect the cord to that outlet.
- The configuration of the AC outlet differs according to area.

Stereo connection cable
White (L)
Red (R)

[For (EB) area only]
BE SURE TO READ THE CAUTION FOR AC POWER SUPPLY CORD ON PAGE 4 BEFORE THE FOLLOWING CONNECTIONS.

[For (GC) area only]
Set the voltage selector to the voltage setting for the area in which the unit will be used.
[Use a minus (−) screwdriver]
Note
If the power supply in your area is 117 V or 120 V, set to the "127 V" position.
Note that this unit will be seriously damaged if this setting is not made correctly.

If the power plug will not fit your socket, use the power plug adaptor (included).

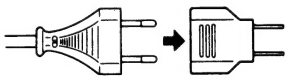

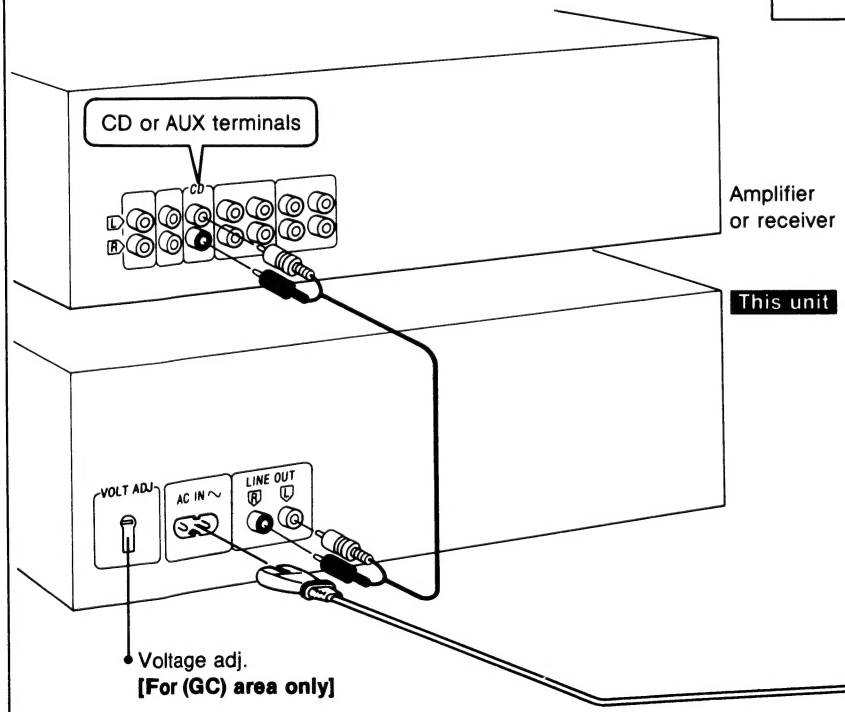

[For (E, EB, EG, GC) areas]
Insertion of Connector
Even when the connector is perfectly inserted, depending on the type of inlet used, the front part of the connector may jut out as shown in the drawing.
However there is no problem using the unit.

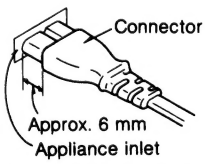

■ REPLACEMENT OF THE FOOT

1. Remove the 4 heat melted posts on the Bottom board ass'y with a pair of nippers or similar tool.
2. To replace the foot (RKA0053-A) on the Bottom board ass'y melt the 4 posts with a soldering iron or install it with a screw (XTB3+6J).

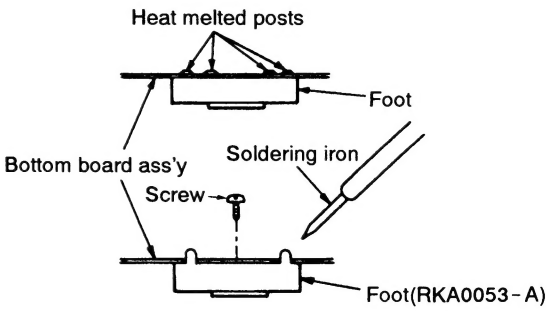

■ CAUTION FOR AC MAINS LEAD

For (EB) area.

("EB" area code model only)

For your safety, please read the following text carefully.

This appliance is supplied with a moulded three pin mains plug for your safety and convenience.
A 5-ampere fuse is fitted in this plug.
Should the fuse need to be replaced please ensure that the replacement fuse has a rating of 5-ampere and that it is approved by ASTA or BSI to BS1362.
Check for the ASTA mark ⓐ or the BSI mark ⓚ on the body of the fuse.

If the plug contains a removable fuse cover you must ensure that it is refitted when the fuse is replaced.
If you lose the fuse cover the plug must not be used until a replacement cover is obtained.
A replacement fuse cover can be purchased from your local dealer.

CAUTION!
IF THE FITTED MOULDED PLUG IS UNSUITABLE FOR THE SOCKET OUTLET IN YOUR HOME THEN THE FUSE SHOULD BE REMOVED AND THE PLUG CUT OFF AND DISPOSED OF SAFELY.
THERE IS A DANGER OF SEVERE ELECTRICAL SHOCK IF THE CUT OFF PLUG IS INSERTED INTO ANY 13-AMPERE SOCKET.

If a new plug is to be fitted please observe the wiring code as shown below.
If in any doubt please consult a qualified electrician.

IMPORTANT

The wires in this mains lead are coloured in accordance with the following code:
Blue: Neutral, Brown: Live.
As these colours may not correspond with the coloured markings identifying the terminals in your plug, proceed as follows:
The wire which is coloured Blue must be connected to the terminal which is marked with the letter N or coloured Black or Blue.
The wire which is coloured Brown must be connected to the terminal which is marked with the letter L or coloured Brown or Red.

WARNING: DO NOT CONNECT EITHER WIRE TO THE EARTH TERMINAL WHICH IS MARKED WITH THE LETTER E, BY THE EARTH SYMBOL ⏚ OR COLOURED GREEN OR GREEN/YELLOW.

THIS PLUG IS NOT WATERPROOF—KEEP DRY.

Before use

Remove the connector cover as follows.

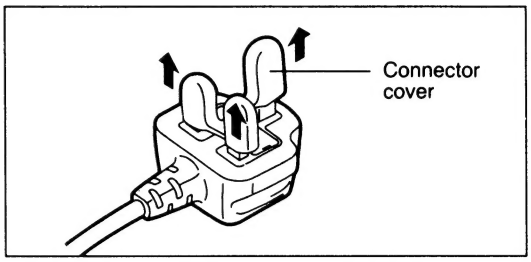

How to replace the fuse

1. Remove the fuse cover with a screwdriver.

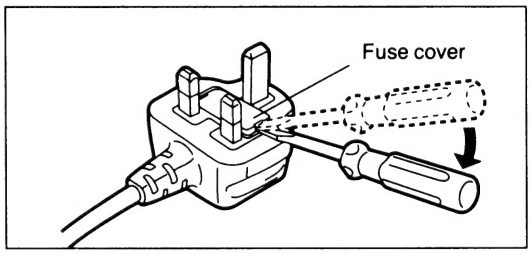

2. Replace the fuse and attach the fuse cover.

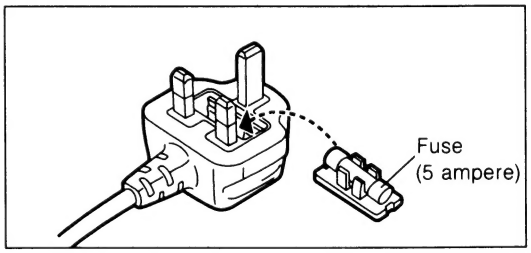

■ FRONT PANEL CONTROLS

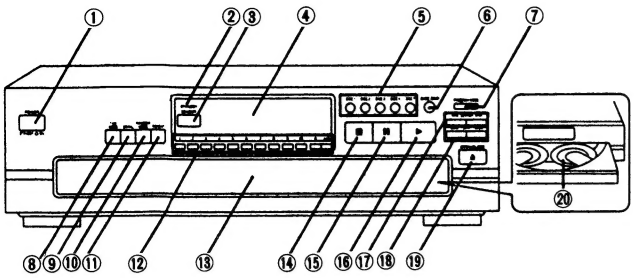

No.	*Name*
①	**Power "STANDBY ⏻ /ON" switch (POWER, STANDBY ⏻ /ON)** Press to switch the unit from on to standby mode or vice versa. In standby mode, the unit is still consuming a small amount of power.
②	**"STANDBY" indicator (STANDBY)** When the unit is connected to the AC mains supply, this indicator lights up in standby mode and goes out when the unit is turned on.
③	**Remote control signal sensor (SENSOR)** The word "SENSOR" does not appear on the panel, but if you have an amplifier (or receiver) with remote control transmitter which is manufactured by Technics, it is possible to operate the main unit using this remote control transmitter. (Some remote control transmitters cannot be used.)
④	**Display**
⑤	**Disc buttons (DISC 1 – 5)**
⑥	**Disc skip button (DISC SKIP)**
⑦	**Program mode button (PROGRAM MODE)**
⑧	**Time mode button (TIME MODE)**
⑨	**Spiral button (SPIRAL)**
⑩	**Random mode button (RANDOM MODE)**
⑪	**Repeat button (REPEAT)**
⑫	**Numeric buttons (1 – 10, 0, >10)**
⑬	**Loading drawer**
⑭	**Stop button (■)**
⑮	**Pause button (❚❚)**
⑯	**Play button (▶)**
⑰	**Search buttons (◀◀ SEARCH ▶▶)**
⑱	**Skip buttons (⏮ SKIP ⏭)**
⑲	**Loading drawer open/close button (▲ OPEN/CLOSE)**
⑳	**Disc trays (1 – 5)**

■ CAUTIONS CONCERNING THE MOVING OF THIS UNIT

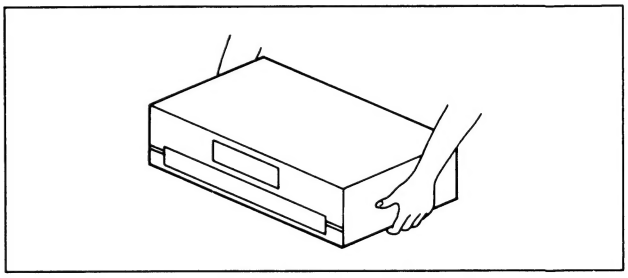

CAUTION

Before moving the changer to another location, be sure to carry out the "Preparations for moving the unit" described below.

Failure to do so will expose the compact discs and the changer to the risk of severe damage.

Preparations for moving the unit

All of the discs must be removed so that the trays are completely empty.
Use the following procedure.

① Press POWER to switch off the unit.
② Press POWER to switch on the unit.
(If there is a disc in the play section, it will be returned to the disc tray at this time.)
③ Press OPEN/CLOSE to open the loading drawer.
④ Press DISC SKIP to rotate the disc trays and remove the discs from all disc trays.
⑤ Press OPEN/CLOSE to close the loading drawer.
⑥ Press POWER to switch off the unit.

If you have pressed a wrong button by mistake, return to step ①.

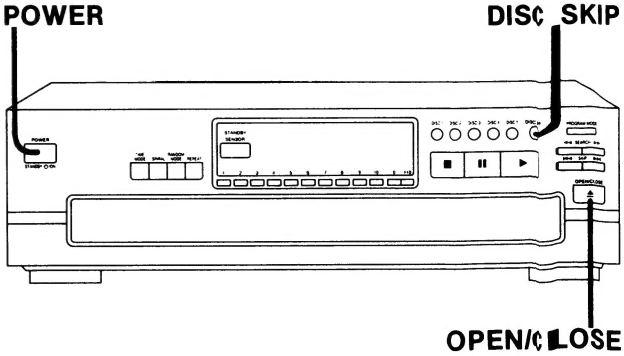

■ BASIC OPERATIONS

Sequential play

All of the discs will be played, beginning from track 1 on the selected disc.

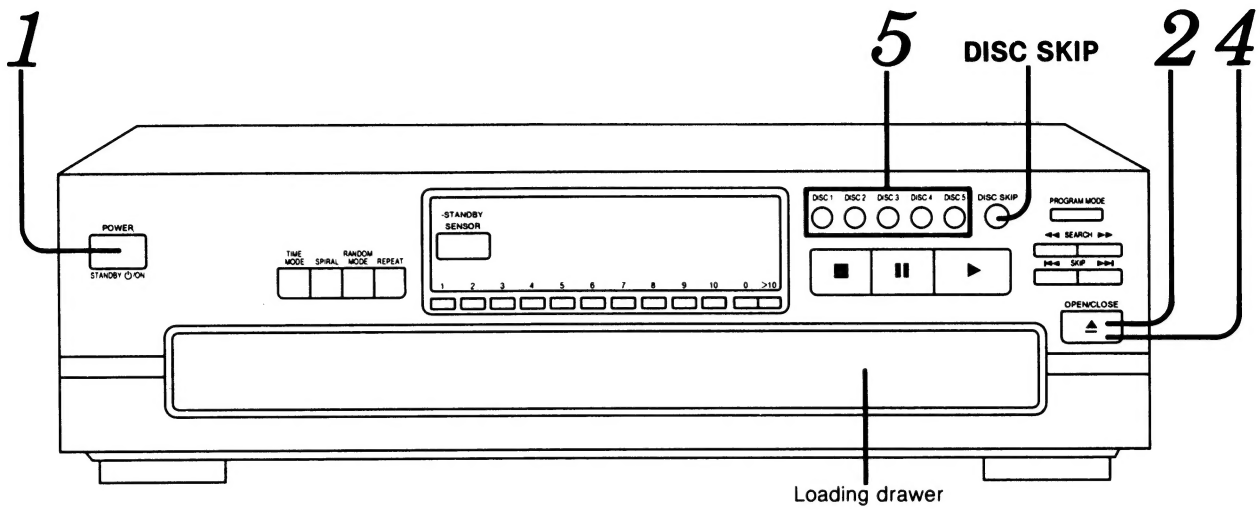

The explanation below is an example of operation in the case where all five disc trays in the changer are holding CDs.

1 POWER

Press POWER.
The unit will switch on.

2 OPEN/CLOSE

Press OPEN/CLOSE to open the loading drawer.
Indicates that the loading drawer is open.

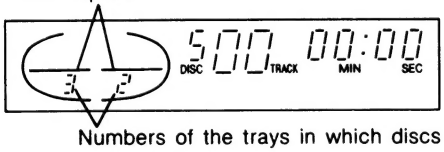

Numbers of the trays in which discs are loaded.

3 **Load the disc(s) on the disc tray(s).**
The discs can be loaded two at a time by pressing DISC SKIP to rotate the carousel.

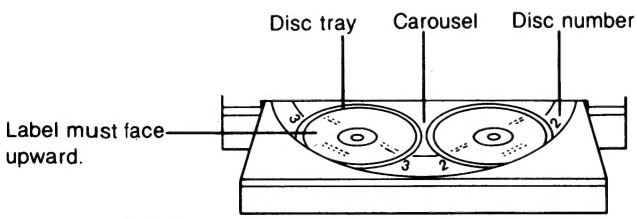

Note
Do not load 3″ (8 cm) and 5″ (12 cm) discs on the same disc tray.

CAUTION
Do not touch the loading drawer and carousel while they are in motion, and do not attempt to rotate the carousel by hand; doing so could result in incorrect operation of the unit and/or damage to the discs.

4 OPEN/CLOSE

Press OPEN/CLOSE again to close the loading drawer.
Note
Do not attempt to close the drawer by hand.

Current play position (The numeral illuminates with a red color.)

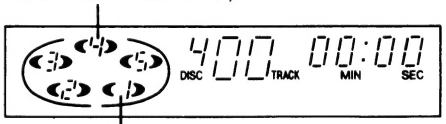

Illuminates when a disc is in the disc tray. If there is no disc in the disc tray, the indication disappears when the disc tray comes to the play position.

5 DISC 1 DISC 2 DISC 3 DISC 4 DISC 5

Press the desired disc button (1 – 5).
Play will begin from the selected disc. If a disc is not on the selected disc tray, the changer plays the disc at the next number.

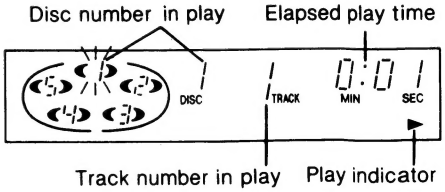

The changer plays all the tracks on all the discs in order and stops automatically when the last track on the last disc finishes playing. The first disc will then be at the playing position.

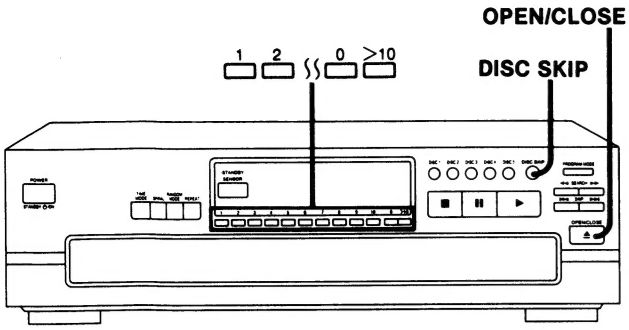

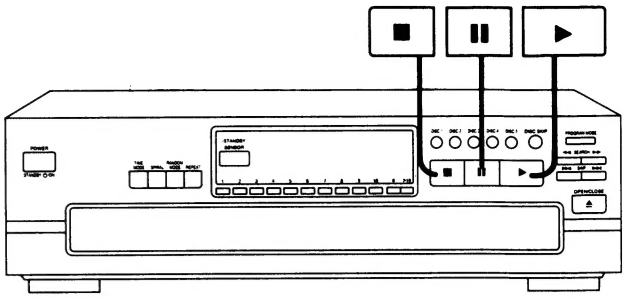

To directly access a desired track

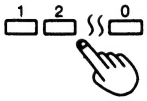

Press the numeric button(s) to select the track.

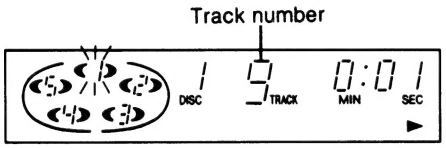

To select a track between 1 and 10:
Press the corresponding number on the numeric button.
To select a two-digit track number over 10:
First press >10, and then press the numbers for the two digits.
For example; number 20:
Press >10, then 2, and then 0.

To exchange discs during play

While playing a disc, it is possible to change the other discs without interrupting play.

① **Press OPEN/CLOSE to open the loading drawer.**

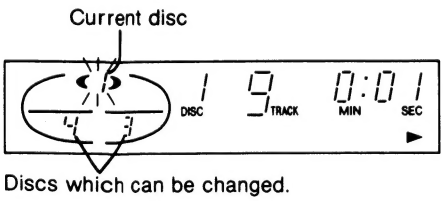

② **Press DISC SKIP to rotate the disc trays and exchange the discs.**
The carousel will move by one disc tray. Pressing again moves the carousel in the opposite direction by two disc trays.

③ **Press OPEN/CLOSE to close the loading drawer.**

Note
If you play a disc with the loading drawer open, discs other than the current disc cannot be played.

To temporarily stop play

Press ⏸.

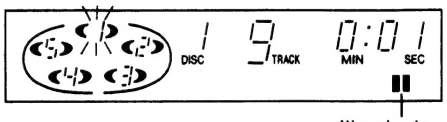

To resume play

Press ▶.

To stop play

Press ■.
The display will show the total number of tracks and the total playing time of the current disc.

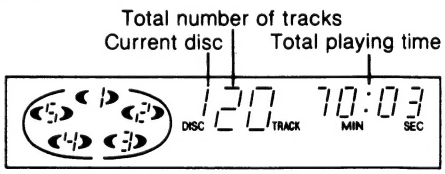

The total playing time displayed includes the silent sections between tracks. For this reason, it may be a few seconds longer than the playing time indicated on the disc.

To resume play

Press ▶.

CAUTION
Do not move this changer with a compact disc inside the unit. If a disc comes off the disc tray, it might be scratched or the changer might become incapable of playing.
(Refer to "Cautions concerning the moving of this unit" on page 5.)

■ SELF-DIAGNOSTIC DISPLAY FUNCTION

Self-diagnostic display

This unit is equipped with a self-diagnostic display function which, if a problem occurs, will display an error code corresponding to the problem.
Use this function when performing maintenance on the unit.

Display procedure

Entering the Self-Diagnostic Mode

1. With no CD loaded in the tray, turn on the unit.
2. Unplug the power cord of the unit, and then plug it back in while pressing the STOP (■), PLAY (▶) and DISC 4 buttons together. This will bring up the FL display.
3. Release the above three buttons.

To Display Self-Diagnostic Results

1. When the FL display lights up, the unit automatically repeats an approximately 50-second cycle of the following operations.

※ → Tray opens. → (Ⓐ) Tray closes. → (Ⓑ) Traverse deck lifts. → Tray opens. → Tray closes. → (Ⓑ) Traverse deck lowers. → Rotary tray turns counter-clockwise two disc slots. → (Ⓒ) Traverse deck lifts once, and then lowers. → Rotary tray turns clockwise one disc slot. → (Ⓒ) Traverse deck lifts once, and then lowers. → Rotary tray turns clockwise three disc slots. → (Ⓒ) Traverse deck lifts once, and then lowers. → Rotary tray turns counterclockwise one disc slot. → (Ⓒ) Traverse deck lifts once, and then lowers. → Rotary tray turns counterclockwise two disc slots. → ※

2. Self-diagnostic fault results appear on the FL display for approximately one second as "H15" at location Ⓐ, "H16" at Ⓑ and "F18" at Ⓒ, during the above cycle.
3. If there are no faults as a result of self-diagnostic, "00 TRACK 00:00 (MIN/SEC)" appears on the FL display.

To Return to Normal Display

- Press the power button to turn off the unit, and then turn it on again.

To Display Self-Diagnostic Results Again

- Follow steps 1 through 3 of "Entering Self-Diagnostic Mode" above.

To Clear the Display of Self-Diagnostic Results

- Turn off the unit to clear the contents of the stored fault results.

Display location

Self-diagnostic display location

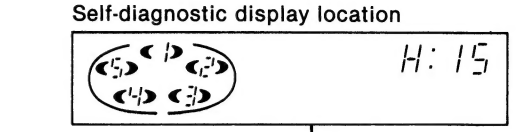

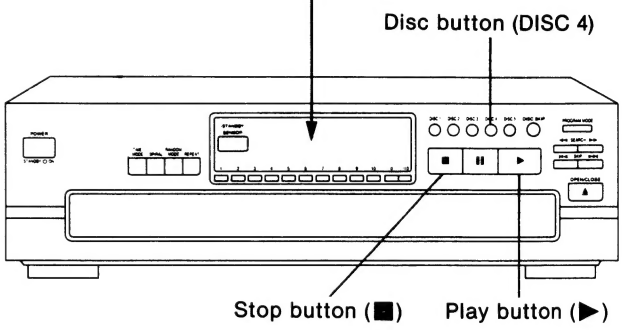

Interpretation of error codes

Error code	Problem condition	Correction procedure
H15	CD tray does not open or close when CD tray open/close (▲) button is pressed. When the CD tray open/close (▲) button is pressed, the CD tray closes momentarily but then opens again, or opens momentarily and then closes again.	Faulty loading motor and motor drive IC (IC501), or faulty contact or short-circuit on open/close detect switch, S551. (Check and replace)
H16		
F18	Faulty rotary turret rotation detection. Example: The turret continues to turn at the initial position without stopping.	Check the optical sensor (D501) and replace if necessary.

■ HANDLING PRECAUTIONS FOR TRAVERSE DECK

The laser diode in the traverse deck (optical pickup) may break down due to potential difference caused by static electricity of clothes or human body.
So, be careful of electrostatic breakdown during repair of the traverse deck (optical pickup).

• Handling of traverse deck (optical pickup)

1. Do not subject the traverse deck (optical pickup) to static electricity as it is extremely sensitive to electrical shock.
2. To prevent the breakdown of the laser diode, an antistatic shorting pin is inserted into the flexible board (FFC).
   When removing or connecting the short pin, finish the job in as short time as possible.
3. Take care not to apply excessive stress to the flexible board (FFC).
4. Do not turn the variable resistor (laser power adjustment). It has already been adjusted.

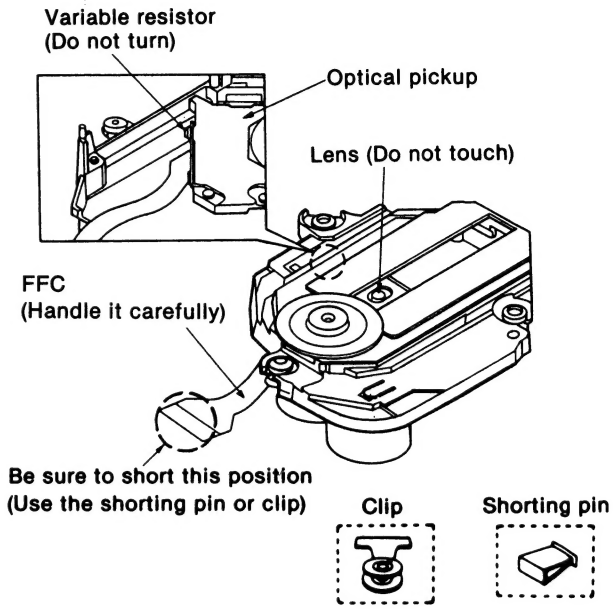

• Grounding for electrostatic breakdown prevention

1. Human body grounding
   Use the anti-static wrist strap to discharge the static electricity from your body.
2. Work table gounding
   Put a conductive material (sheet) or steel sheet on the area where the optical pickup is placed, and ground the sheet.

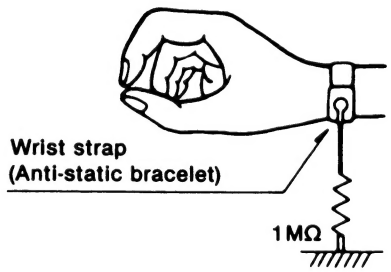

Caution:

The static electricity of your clothes will not be grounded through the wrist strap. So, take care not to let your clothes touch the traverse deck (optical pickup).

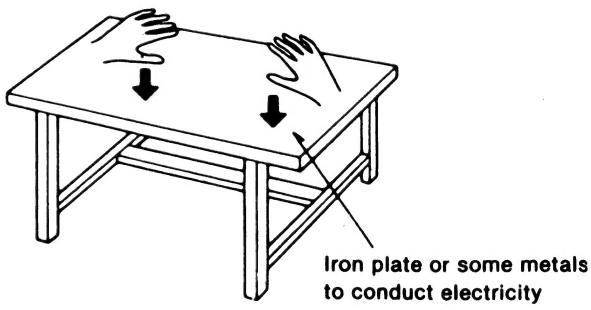

■ DISASSEMBLY INSTRUCTIONS

"ATTENTION SERVICER"
Some chassis components may have sharp edges. Be careful when disassembling and servicing.
Warning: This product uses a laser diode. Refer to caution statements on page 2.
ACHTUNG: • Die lasereinheit nicht zerlegen.
• Die lasereinheit dart nur gegen eine vom hersteller spezifizierte einheit ausgetauscht werden.

Ref.No. 1	Removal of the cabinet

Procedure 1

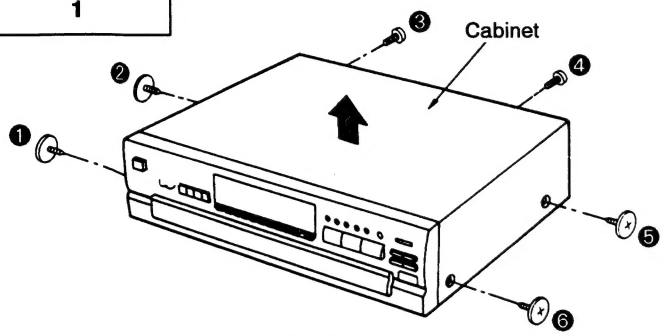

1. Remove the 6 screws(❶~❻).
2. Remove the cabinet in the direction of arrow.

Ref.No. 3	Removal of the operation P.C.B.

Procedure 1→2→3

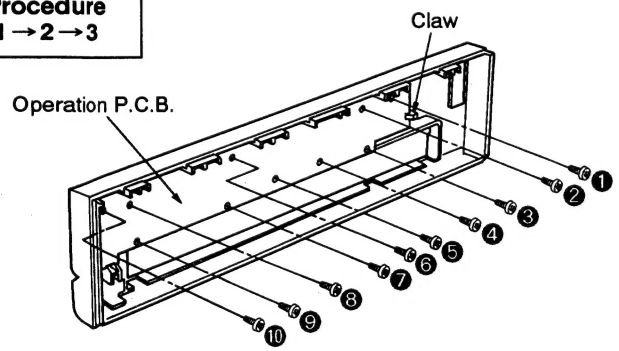

1. Remove the 10 screws(❶~⑩).
2. Release the 1 claw.

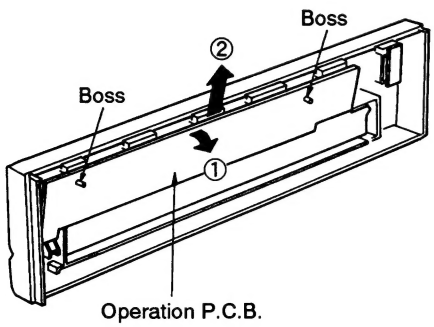

3. Tilt the operation P.C.B. in the direction of arrow① and release the bosses. Then, remove the operation P.C.B. in the direction of arrow②.

Ref.No. 2	Removal of the front panel ass'y

Procedure 1→2

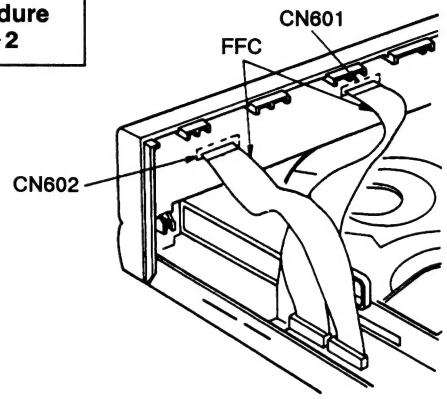

1. Pull out the FFC from connectors(CN601, CN602).

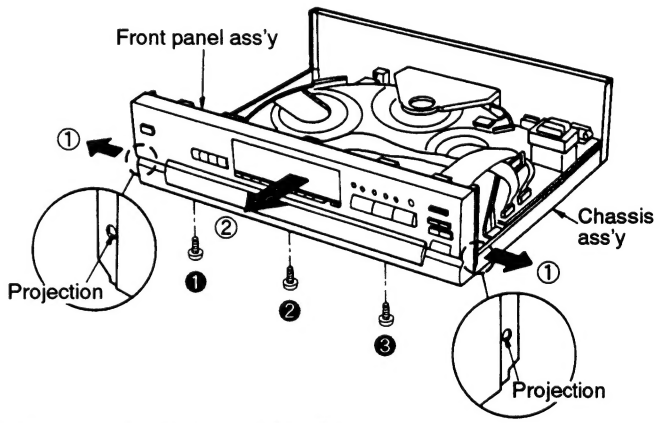

2. Remove the 3 screws(❶~❸).
3. Pull the front panel ass'y in both direction of arrow① to unlock it from the projections of the chassis ass'y.
4. Remove the front panel ass'y in the direction of arrow②.

Ref.No. 4	Removal of the power switch P.C.B.

Procedure 1→2→4

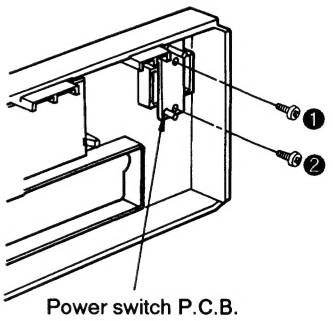

• Remove the 2 screws(❶, ❷).

Ref.No. 5	Removal of the tray ass'y

Procedure 1→2→5

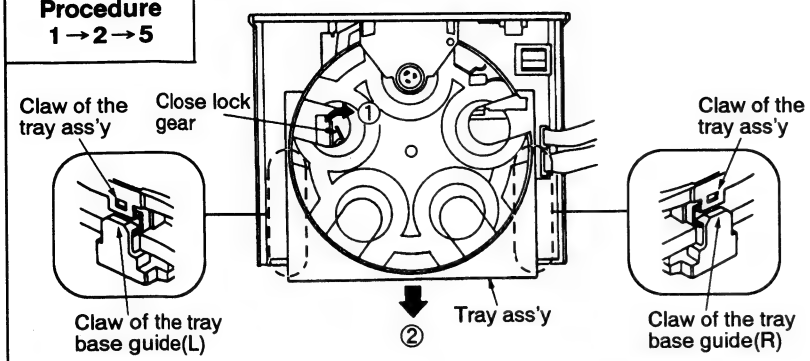

1. Keep the close lock gear pressed in the direction of arrow①, and move the tray ass'y in the direction of arrow②.
2. Fit the claw of the tray ass'y in the claw of the tray base guide(L).
3. Fit the claw of the tray ass'y in the claw of the tray base guide(R).

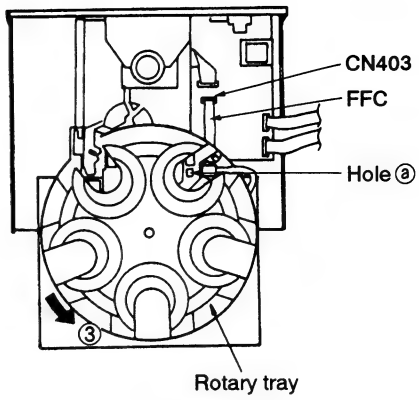

4. Pull out the FFC from connector(CN403).
5. Rotate the rotary tray to the position that can be confirmed the hole ⓐ in the direction of arrow③.

Ref.No. 6	Removal of the tray base guide(L) and tray base guide(R)

Procedure 1→2→5→6

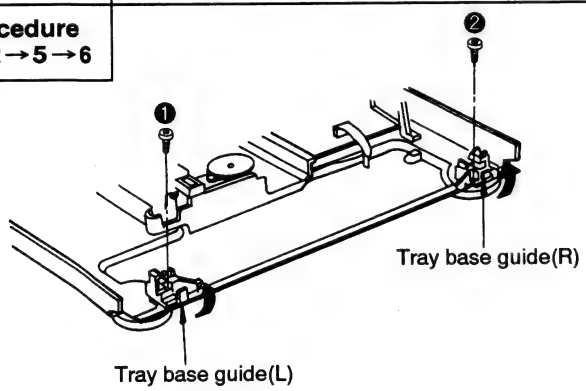

1. Remove the 2 screws(❶, ❷).
2. Remove the tray base guide(L) and tray base guide(R) in the direction of arrow.

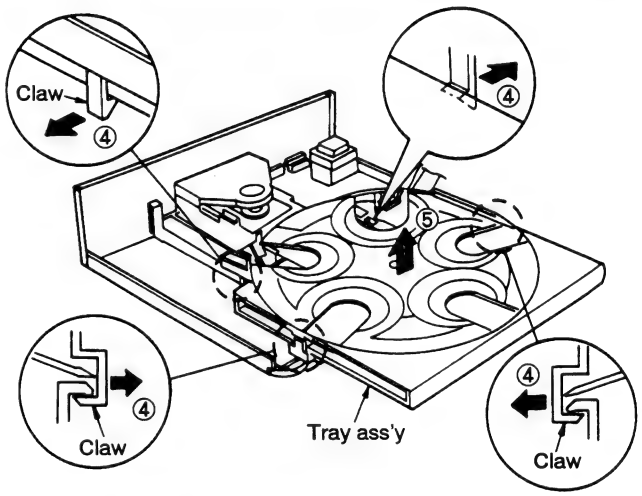

5. Push and release the 4 claws in the direction of arrow④, and then remove the tray ass'y in the direction of arrow⑤.

Ref.No. 7	Removal of the power transformer

Procedure 1→7

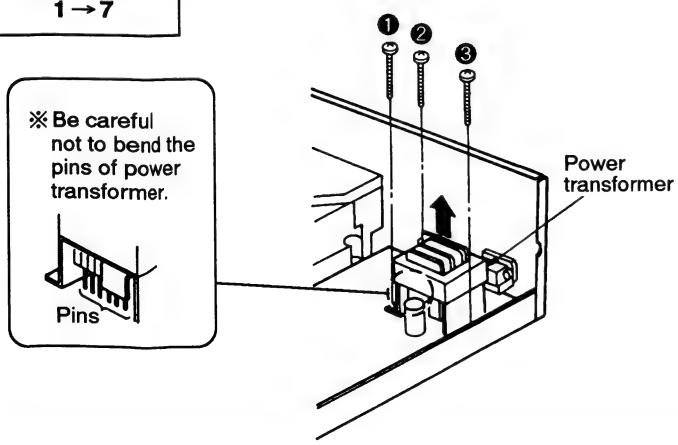

1. Remove the 3 screws(❶~❸).
2. Remove the power transformer in the direction of arrow.

Ref.No. 8	Removal of the cable holder

Procedure 1→2→5→8

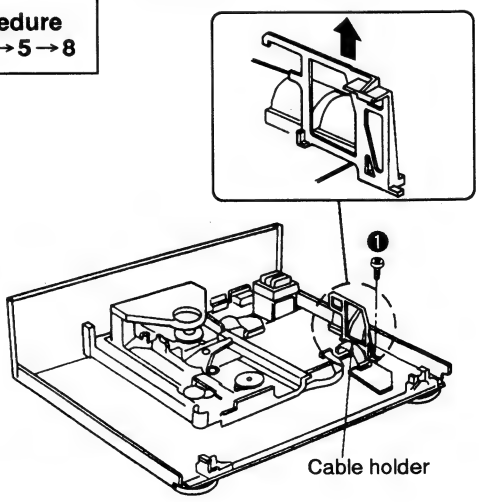

1. Remove the 1 screw(❶).
2. Lift the cable holder in the direction of arrow.

Ref.No. 9	Removal of the main P.C.B. and D/A CONV. P.C.B.

Procedure
1 → 2 → 5 → 7 → 8 → 9

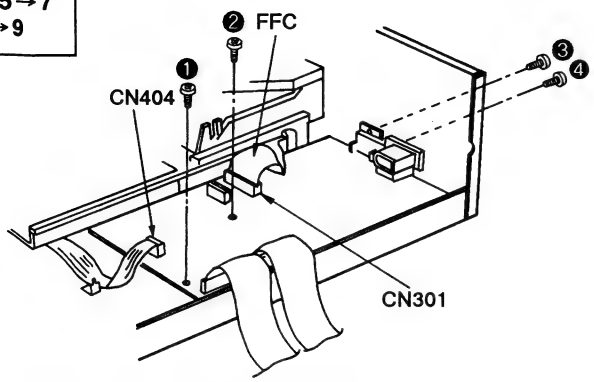

1. Pull out the FFC from connector(CN301).
2. Remove 1 connector(CN404).
3. Remove the 4 screws(❶~❹).

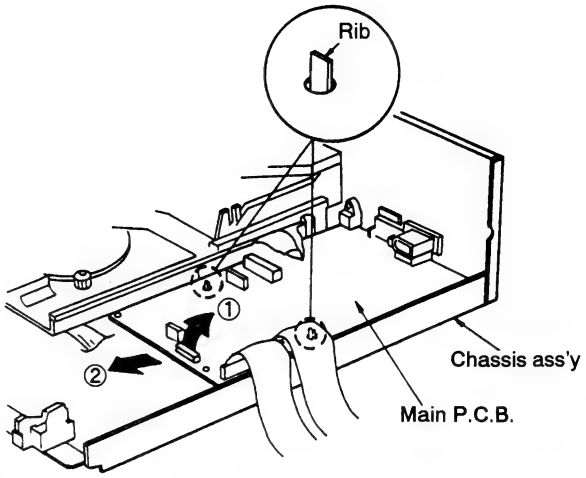

4. Lift up the main P.C.B. in the direction of arrow①, and release the 2 ribs on the chassis ass'y. Then , remove the main P.C.B. in the direction of arrow②.

Ref.No. 10	Removal of the clamp plate ass'y

Procedure
1 → 10

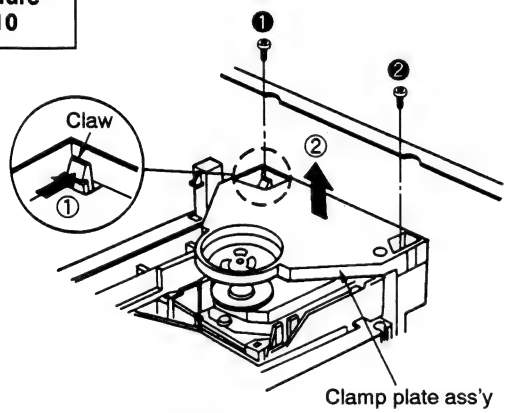

1. Remove the 2 screws(❶, ❷).
2. Push the claw in the direction of arrow①, and then remove the clamp plate ass'y in the direction of arrow②.

Ref.No. 11	Removal of the fixed plate, magnet and clamper

Procedure
1 → 10 → 11

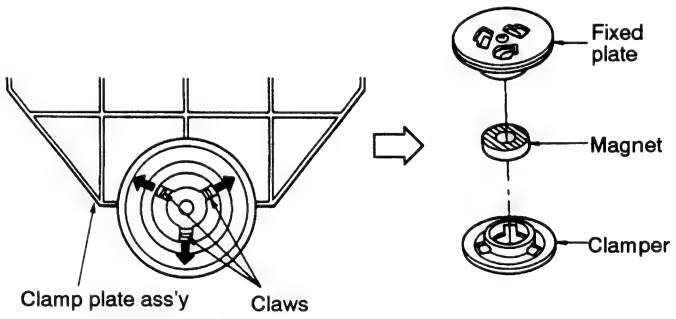

• Release the 3 claws in the direction of arrow.

Ref.No. 12	Removal of the mechanism base ass'y

Procedure
1 → 2 → 5 → 12

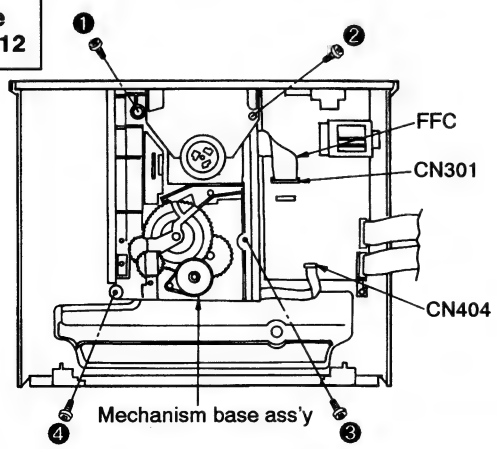

1. Pull out the FFC from connector(CN301).
2. Remove 1 connector(CN404).
3. Remove the 4 screws(❶~❹).

Ref.No. 13	Removal of the photo transistor P.C.B.

Procedure
1 → 13

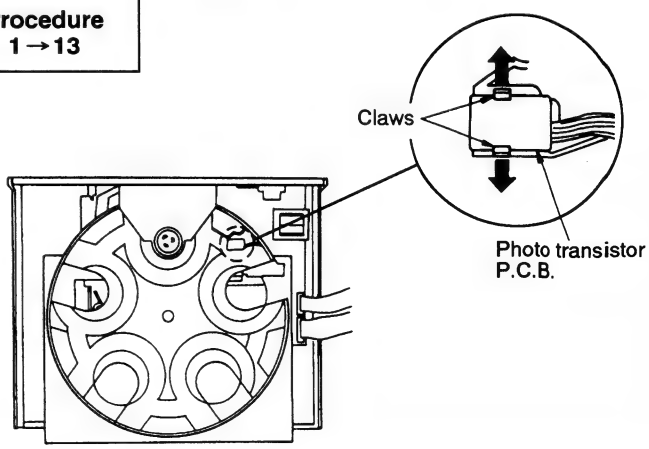

• Release the 2 claws in the direction of arrow.

Ref.No. 14 **Removal of the rotary tray**

Procedure 1→2→14

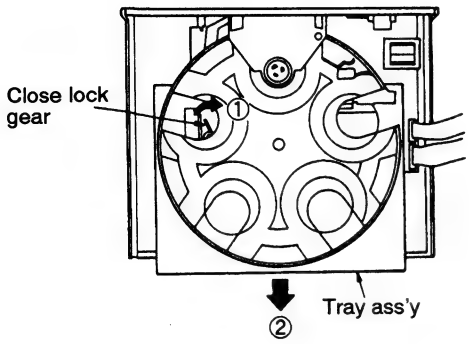

1. Keep the close lock gear pressed in the direction of arrow①, and move the tray ass'y in the direction of arrow②.

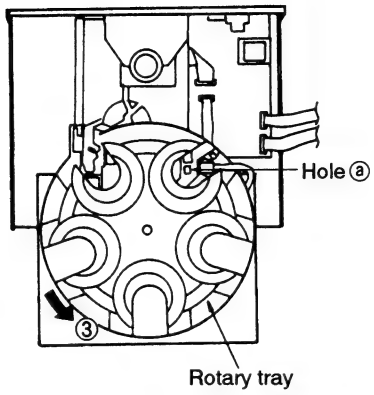

2. Rotate the rotary tray to the position that can be confirmed the hole ⓐ in the direction of arrow③.

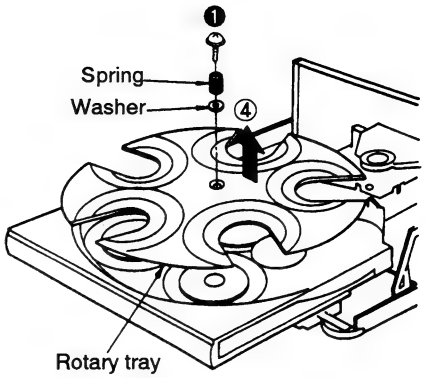

3. Remove the 1 screw(❶).
4. Remove the spring and washer.
5. Remove the rotary tray in the direction of arrow④.

Ref.No. 15 **Removal of the sensor P.C.B.**

Procedure 1→2→5→13 →14→15

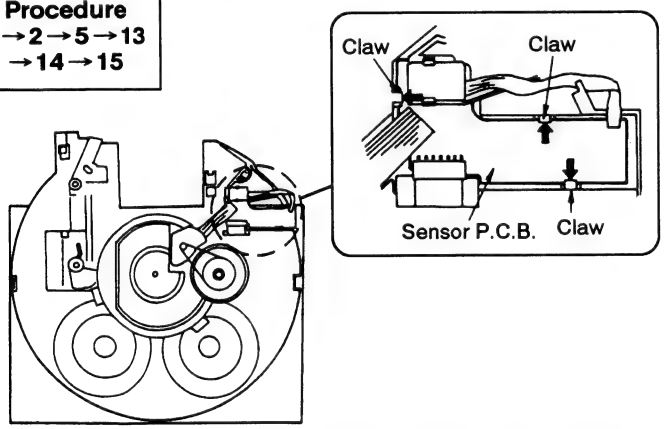

- Release the 3 claws in the direction of arrow, and remove the sensor P.C.B.

Ref.No. 16 **Removal of reduction gear**

Procedure 1→2→5→14 →16

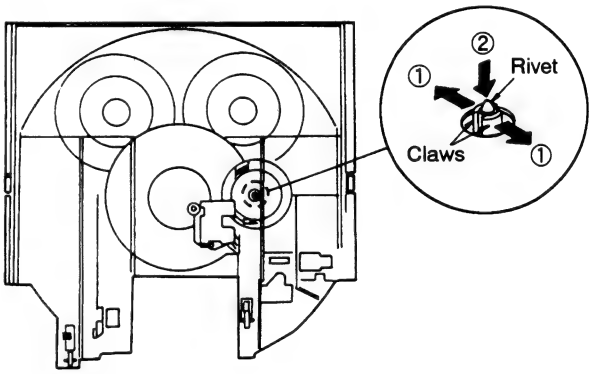

1. Release the 2 claws in the direction of arrow①, and then push the rivet in the direction of arrow②.

Ref.No. 17 **Removal of motor holder and tray motor ass'y**

Procedure 1→2→5→14 →16→17

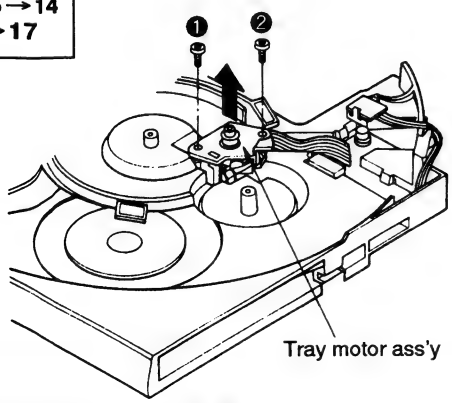

1. Remove the 2 screws(❶, ❷).
2. Remove the motor holder and tray motor ass'y in the direction of arrow.

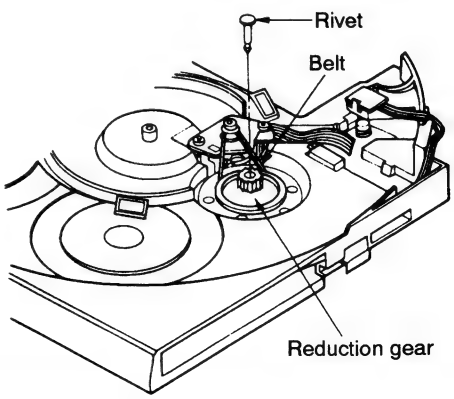

2. Pull out the rivet.
3. Remove the belt.
3. Remove the reduction gear.

Ref.No. 18	Removal of the tray motor P.C.B.

Procedure
1→2→5→14→16→17

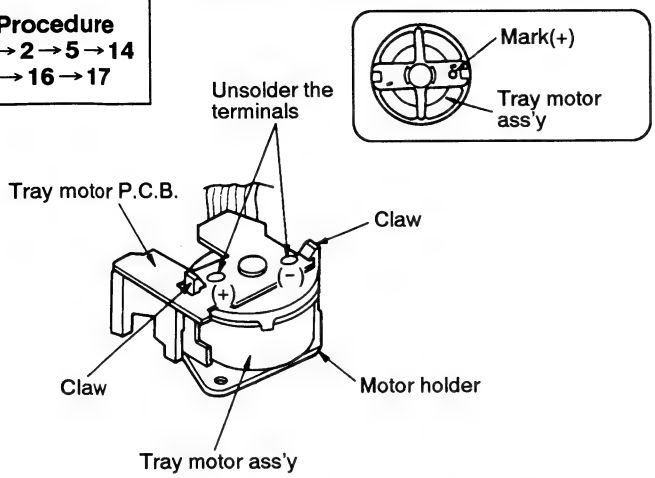

1. Release the 2 claw, and then remove the motor holder.
2. Unsolder the terminals of the tray motor ass'y.

Ref.No. 19	Removal of the tray roller

Procedure
1→2→14→19

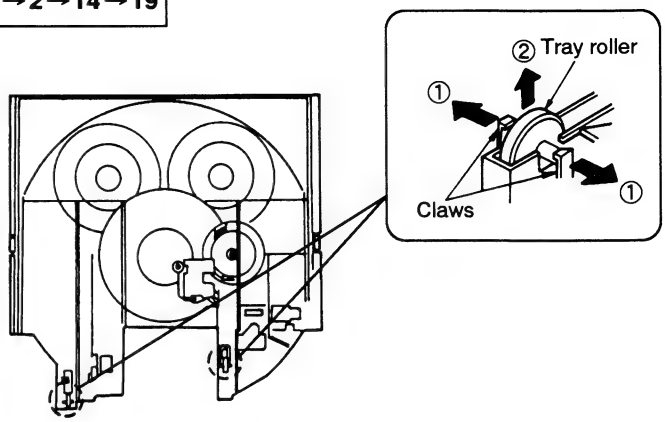

• Release the 2 claws in the direction of arrow①, and then remove the tray roller in the direction of arrow②.

Ref.No. 20	Removal of the close lock gear

Procedure
1→2→14→20

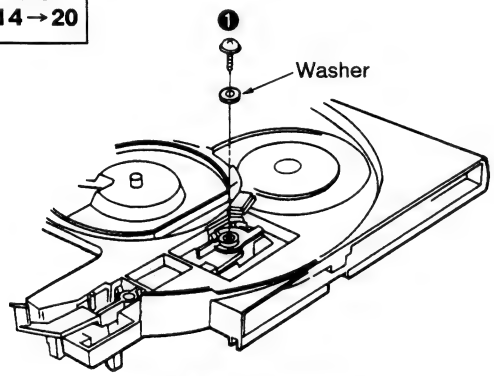

1. Remove the 1 screw(❶) and washer.

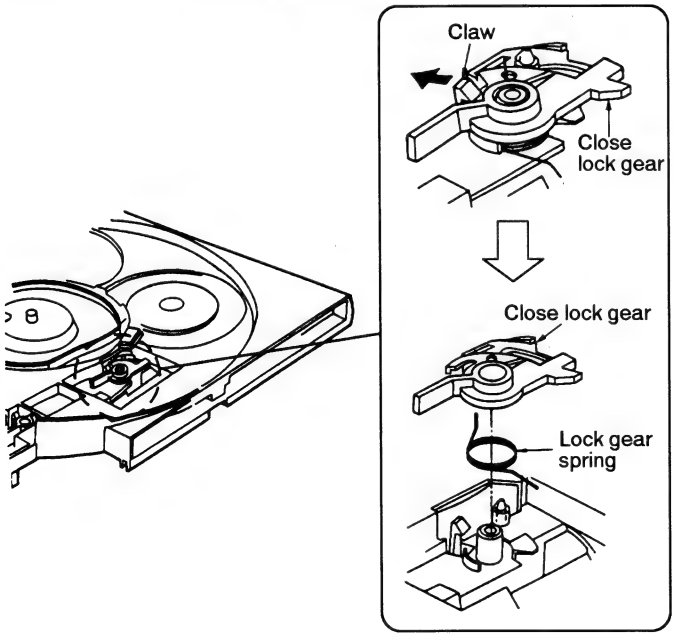

2. Release the 1 claw and then remove the close lock gear and lock gear spring.

Ref.No. 21	Removal of the open lock gear

Procedure
1→2→5→14→21

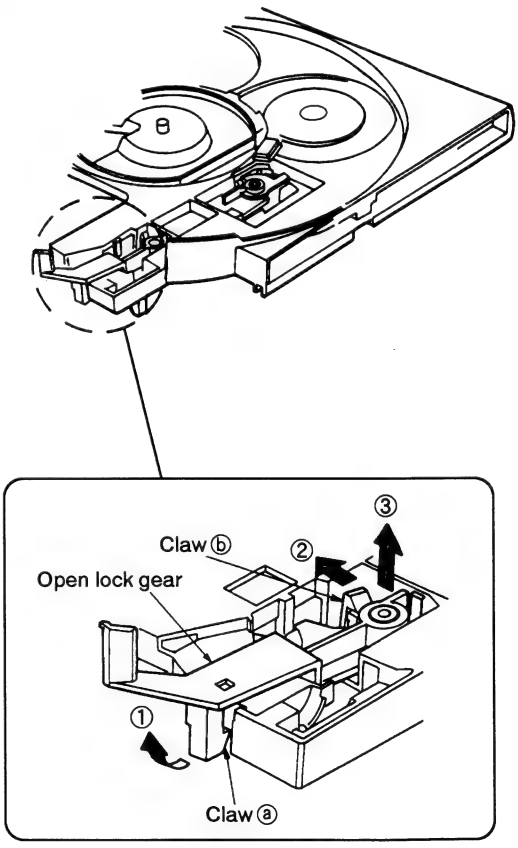

1. Release the claw ⓐ of open lock gear in the direction of arrow①.
2. Release the claw ⓑ of open lock gear in the direction of arrow②, and then remove the of open lock gear in the direction of arrow③.

Ref.No. 22	Removal of the reinforcing plate, drive gear(1) and drive gear(2)

Procedure
1 → 2 → 5 → 22

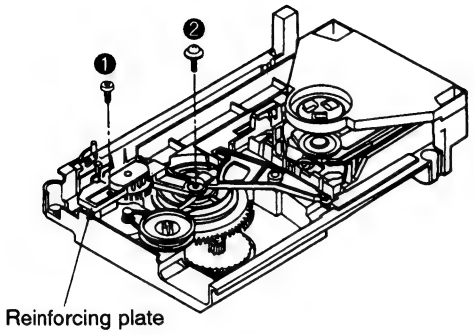

1. Remove the 2 screws(❶, ❷).
2. Remove the reinforcing plate.

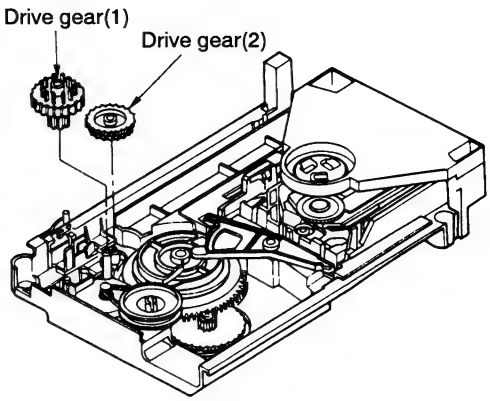

3. Remove the drive gear(1) and drive gear(2).

Ref.No. 23	Removal of the drive lever

Procedure
1 → 2 → 5 → 22 → 23

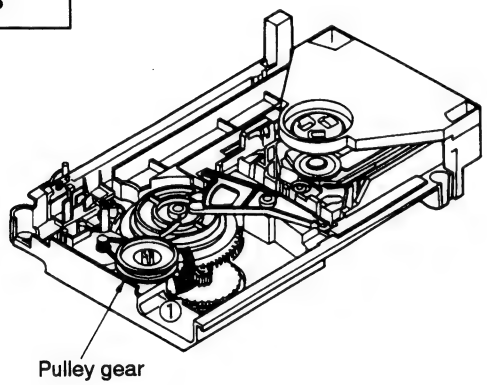

1. Rotate the pulley gear to full position in the direction of arrow①.

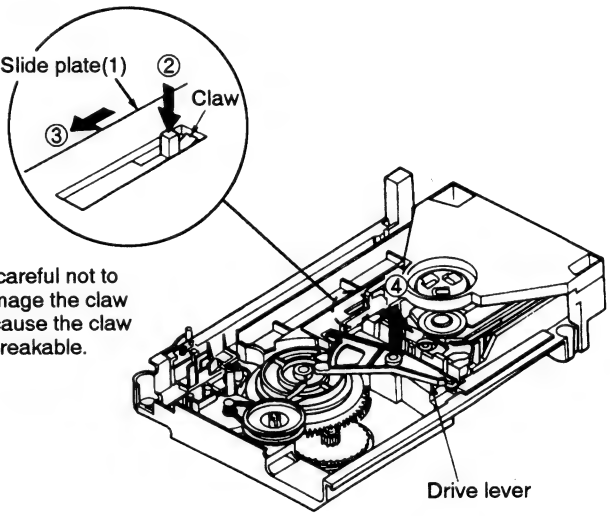

Note) Be careful not to damage the claw because the claw is breakable.

2. Push the claw in the direction of arrow②, and then move the slide plate(1) in the direction of arrow③.
3. Remove the drive lever in the direction of arrow④.

Ref.No. 24	Removal of the pulley gear

Procedure
1 → 2 → 5 → 24

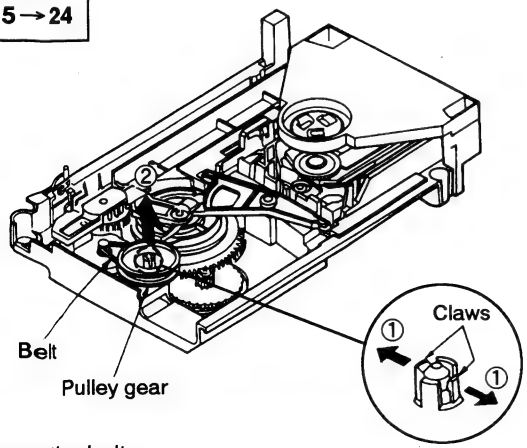

1. Remove the belt.
2. Release the 2 claws in the direction of arrow①, and then remove the pulley gear in the direction of arrow②.

Ref.No. 25	Removal of the drive cam and reduction gear

Procedure
1 → 2 → 5 → 22 → 23 → 24 → 25

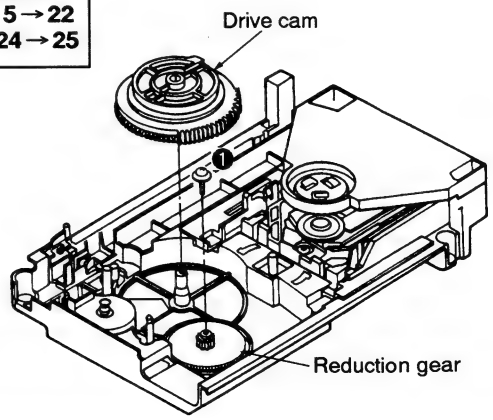

1. Remove the drive cam.
2. Remove 1 screw(❶).
3. Remove the reduction gear.

Ref.No. 26	Removal of the loading motor ass'y and loading motor P.C.B.

Procedure
1 → 2 → 5 → 12 → 26

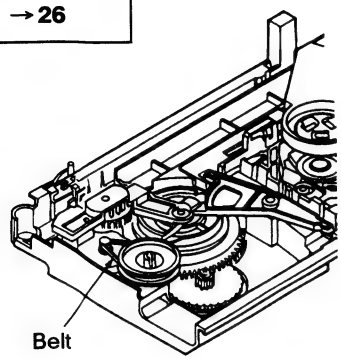

1. Remove the belt.

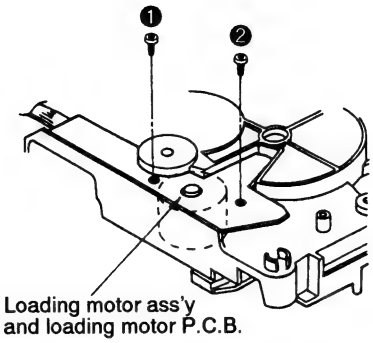

2. Remove the 2 screws(❶, ❷).
3. Remove the loading motor ass'y and loading motor P.C.B.

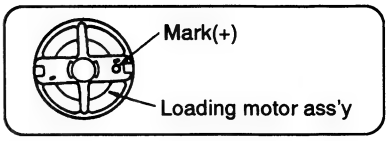

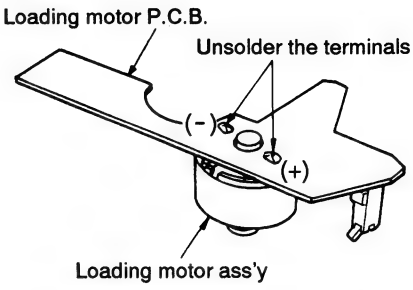

4. Unsolder the terminals of the loading motor ass'y.

Ref.No. 27	Removal of the traverse deck ass'y

Procedure
1 → 2 → 5 → 27

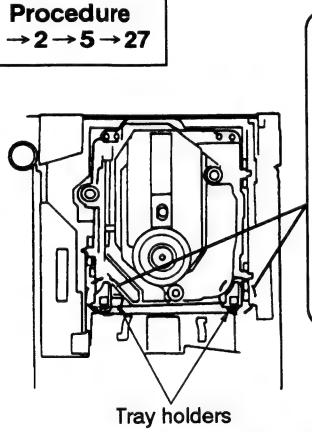

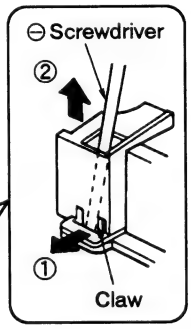

1. While pushing the claw of tray holders in the direction ① using the ⊖ screwdriver, remove the tray holder in the direction of arrow ②.

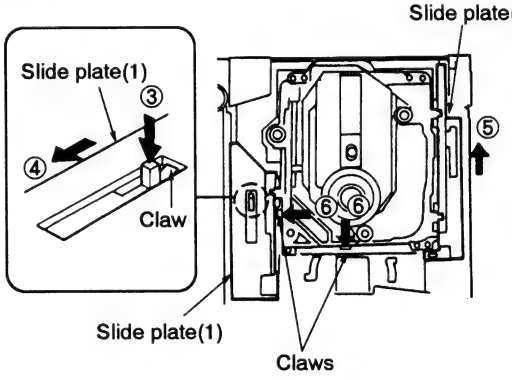

2. Push the claw in the direction of arrow ③, and then move the slide plate(1) in the direction of arrow ④.
3. Move the slide plate(2) in the direction of arrow ⑤.

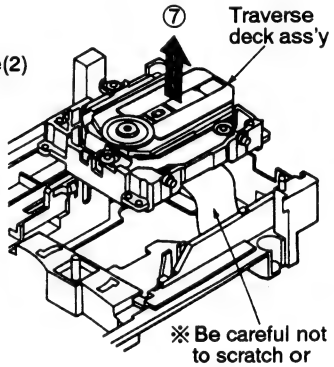

4. Release the 2 claws in the direction of arrow ⑥, and then remove the traverse deck ass'y in the direction of arrow ⑦.

Ref.No. 28	Removal of the slide plate(1)

Procedure
1 → 2 → 5 → 22 → 23 → 27 → 28

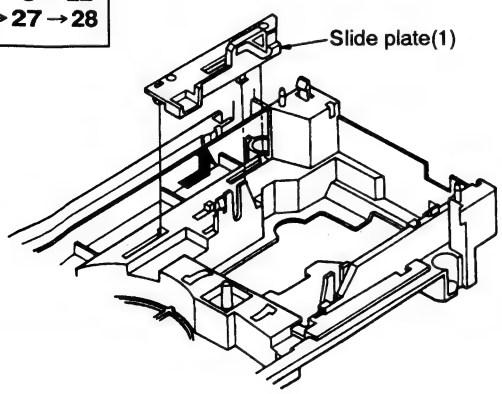

• Remove the slide plate(1) in the direction of arrow.

Ref.No. 29	Removal of the slide plate(2)

Procedure
1 → 2 → 5 → 22 → 23 → 27 → 29

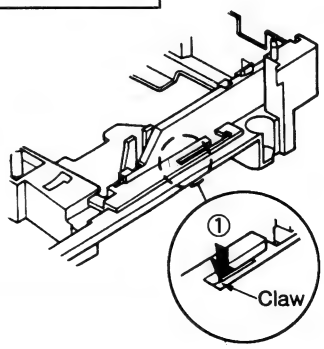

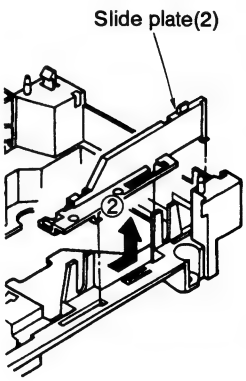

• Push the claw in the direction of arrow ①, and then remove the slide plate(2) in the direction of arrow ②.

Ref.No. 30	Removal of the servo P.C.B.
Procedure 1→2→5→27→30	

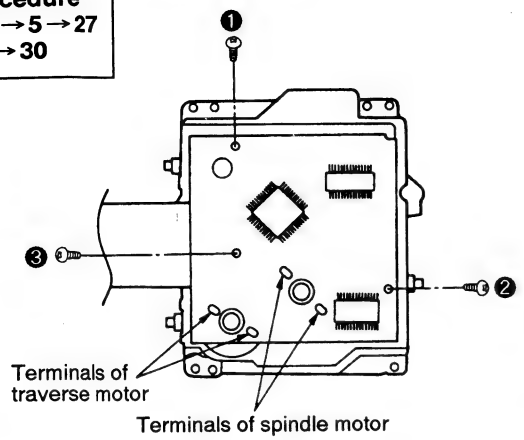

1. Remove the 3 screws(❶~❸).
2. Unsolder the 2 terminals of spindle motor.
3. Unsolder the 2 terminals of traverse motor.

1. Push the top of the connector in the direction of arrow ①.
2. Remove the FFC in the direction of arrow ②.

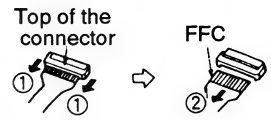

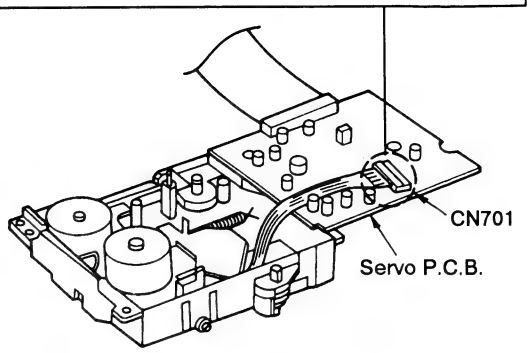

4. Remove the FFC from connector(CN701).

Caution:
Insert a short pin into the traverse unit FFC.
(Refer to " handling precautions for traverse deck " on page 9.)

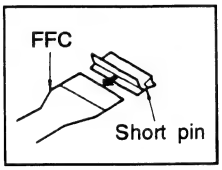

Ref.No. 31	Removal of the traverse deck ass'y
Procedure 1→2→5→27→30→31	

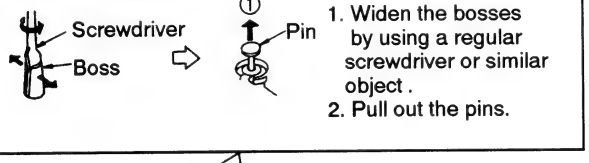

1. Widen the bosses by using a regular screwdriver or similar object.
2. Pull out the pins.

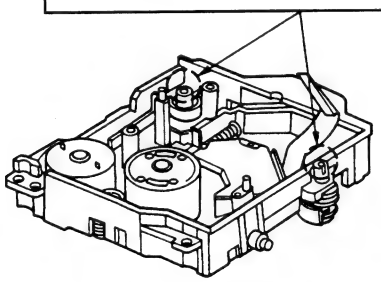

1. Remove the 2 pins in the direction of arrow ①.

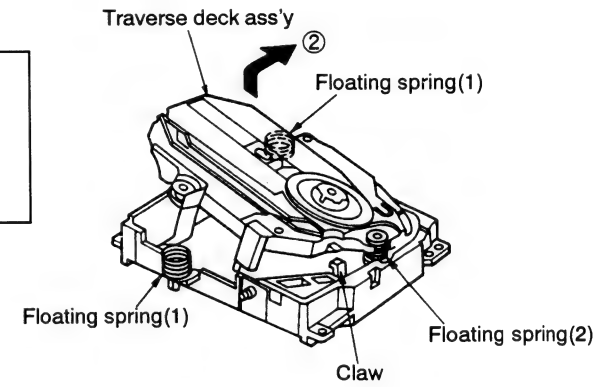

2. Release the claw, and then remove the traverse deck ass'y in the direction of arrow ②.

Caution:
Be careful not to lose the 3 springs because those will also be removed on removal of the traverse deck ass'y.

■ INSTALLATION OF SERVO P.C.B.

1. When installing servo P.C.B., move the optical pickup to the more external side than the mark (▲).
   (When the optical pickup is not moved, the switch(S701) on the servo P.C.B. may be broken.)
2. Connect the FFC to the connector(CN701).
3. Install the servo P.C.B. to the traverse unit with 3 screws (❶~❸).
4. Solder the 2 terminals of the traverse motor and the 2 terminals of the spindle motor.

Note: • Insert the FFC into the connector and lock securely. After installing the motor with screws, solder
• each motor terminal.

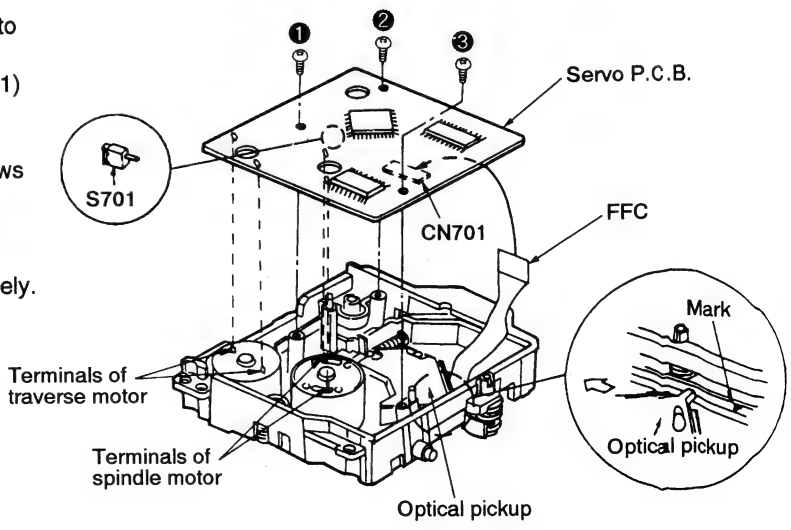

■ Installation of the traverse deck ass'y

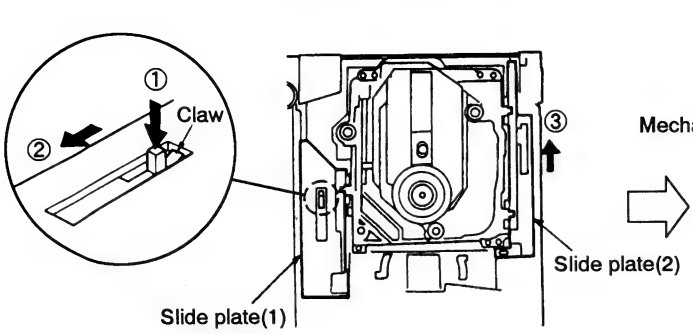

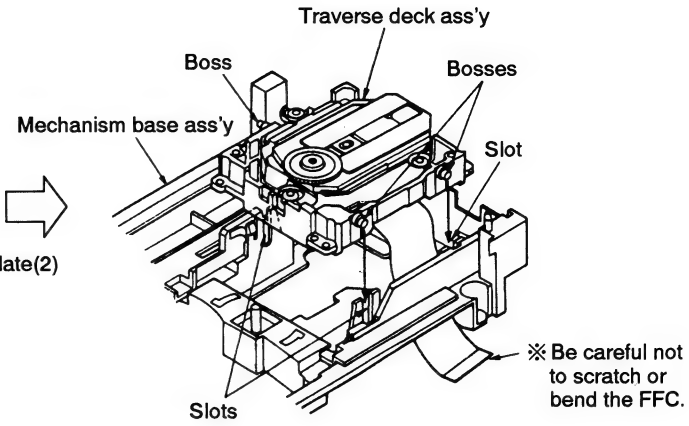

1. Push the claw in the direction of arrow①, and then move the slide plate(1) in the direction of arrow②.
2. Move the slide plate(2) in the direction of arrow③.
3. Align the 3 bosses of traverse deck ass'y with the slots of mechanism base ass'y.

■ Installation of the drive lever

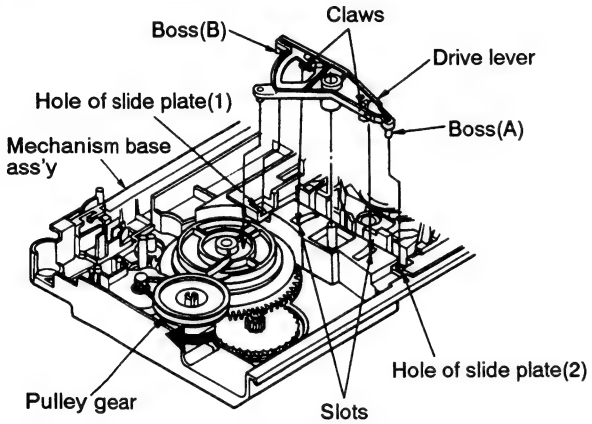

1. Rotate the pulley gear to full position in the direction of arrow.
2. Align the boss(A) with the hole of slide plate(2).
3. Align the boss(B) with the hole of slide plate(1).
4. Align the claws of drive lever with the slots of loading mechanism ass'y.

■ Positioning of the drive cam

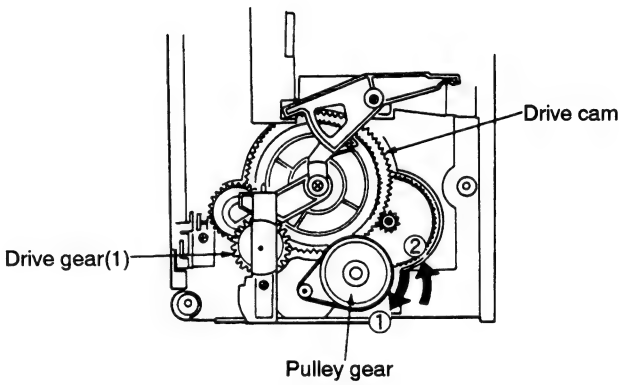

1. Rotate the pulley gear to full position in the direction of arrow①.
2. Then, rotate the pulley gear in the direction of arrow②.
3. When the drive gear(1) stops rotating, turn off that pulley gear is rotating.

■ Installation of the tray ass'y

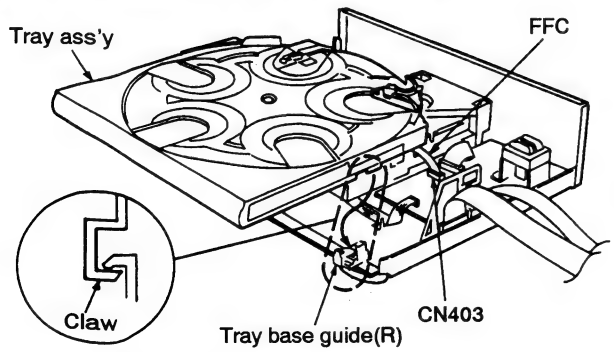

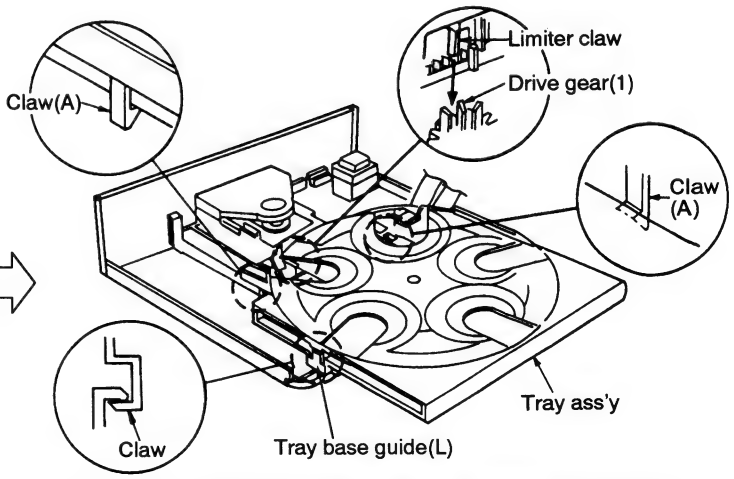

1. Attach the FFC to the connector(CN403).
2. Fit the claws on the right side of the tray ass'y underneath the claws on the tray base guide(R).
3. Fit the claws on the right side of the tray ass'y underneath the claws on the tray base guide(L).
4. Fit the limiter claw on the tray ass'y between the teeth of the drive gear(1).
5. Catch the 2 claws(A) with the mechanism base ass'y.
6. After installing the tray ass'y, check that it moves smoothly.

■ HOW TO CHECK THE MAIN AND SERVO P.C.B.

1. Remove the cabinet. (See Ref.No.1 of the disassembly instructions.)
2. Remove the front panel ass'y. (See Ref.No.2 of the disassembly instructions.)
3. Remove the tray ass'y. (See Ref.No.5 of the disassembly instructions.)
4. Remove the cable holder. (See Ref.No.8 of the disassembly instructions.)
5. Remove the clamp plate ass'y. (See Ref.No.10 of the disassembly instructions.)
6. Remove the fixed plate, magnet and clamper. (See Ref.No.11 of the disassembly instructions.)

● **Check the main P.C.B.**

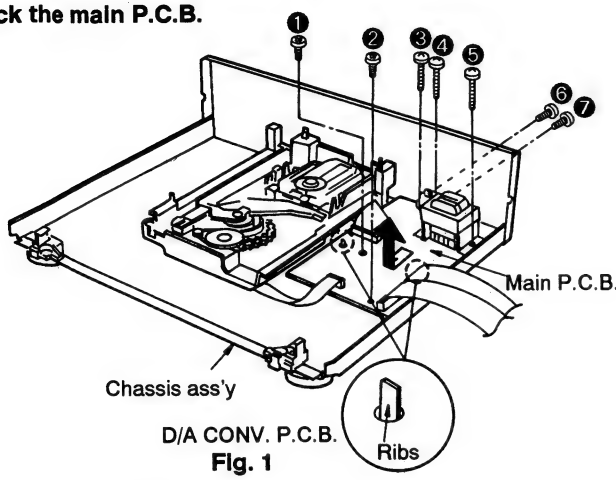

Fig. 1

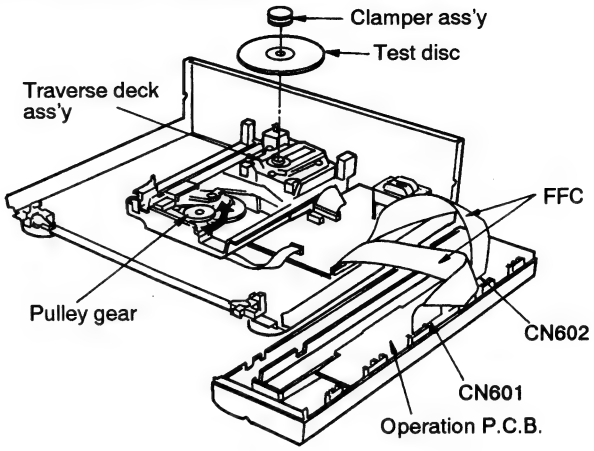

Fig. 2

7. Remove the 7 screws(❶~❼).
8. Lift up the main P.C.B. to release the 2 ribs of chassis ass'y, and then remove the main P.C.B. in the direction of arrow.
9. Rotate the pulley gear in the direction of arrow until traverse deck ass'y comes up.
10. Place the test disc and secure it by using the clamper ass'y.
11. Connect the 2 FFC (CN601, CN602) as shown in Fig. 2.
12. Set up the main P.C.B.
13. Connect the main P.C.B. ground terminal (line out terminal) to the chassis ass'y with a lead wire.
14. When checking the soldered surface of the main P.C.B., do as shown in Fig. 3.

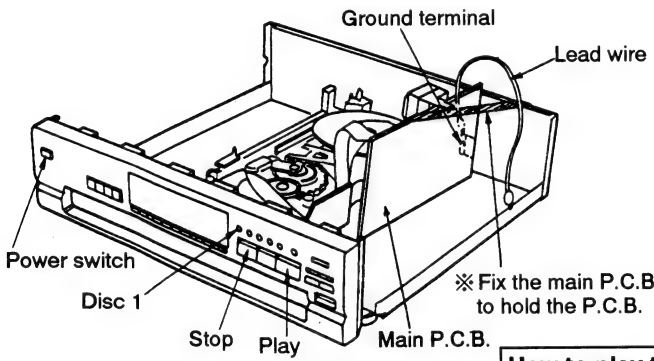

Fig. 3

How to play the disc

Unplug the set previously.

↓

While pressing 3 keys of STOP(■), PLAY(▶), and DISC 1 simultaneously, insert the power plug of the set into the plug socket.

NOTE:
Be sure to begin pressing the 3 keys before plugging the set. Otherwise, the Service Mode cannot be set.

↓

FL lights up? — **No** → Press the POWER key (POWER ON). → FL lights up.

↓ **Yes**

Withdraw hand from the 3 keys.

↓

Mount the disc on the turntable and press the PLAY key.

NOTE:
Make sure that the traverse mechanism is then in UP(PLAY)position.

Service Mode setting

When checking the main/servo P.C.B. of this set, remove the rotary tray previously.
After the rotary tray is removed, the microcomputer is kept from issuing PLAY command even when the PLAY key is pressed.
Stated above is the procedure of setting the Service Mode for keeping the microcomputer in the PLAY mode even after removal of the rotary tray.

● **Check the servo P.C.B.**

7. Remove the mechanism base ass'y. (See Ref.No.12 of the disassembly instructions.)
8. Remove the traverse deck ass'y. (See Ref.No.27 of the disassembly instructions.)

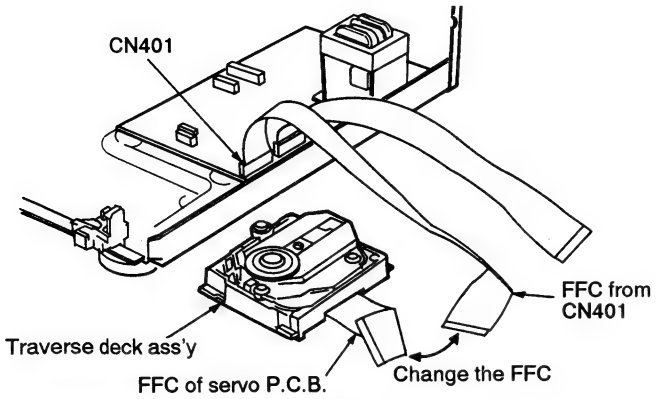

Fig. 4

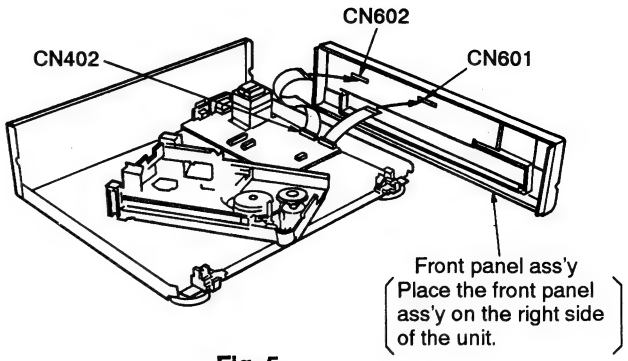

Fig. 5

9. Replace the FFC of servo P.C.B. to the FFC (CN401) of main P.C.B.

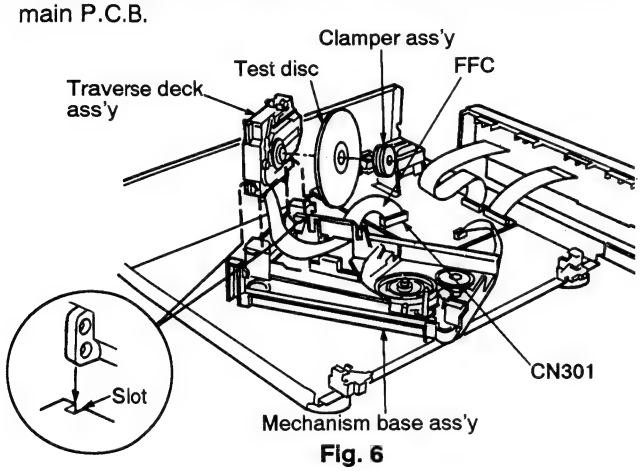

Fig. 6

10. Connect the FFC as shown in above.
    (Between CN401 and CN601
    Between CN402 and CN602)
11. Insert the traverse deck in the slot of mechanism base ass'y.
12. Connect the FFC of servo P.C.B. to the connector (CN301) of main P.C.B.
13. Set the test disc on the traverse deck ass'y, and then fix the traverse deck ass'y with clamper ass'y.
14. When checking the soldered surface of servo P.C.B., do as shown in Fig. 7.

Notes:

- After completing the check, restore the replaced FFC to their original positions.

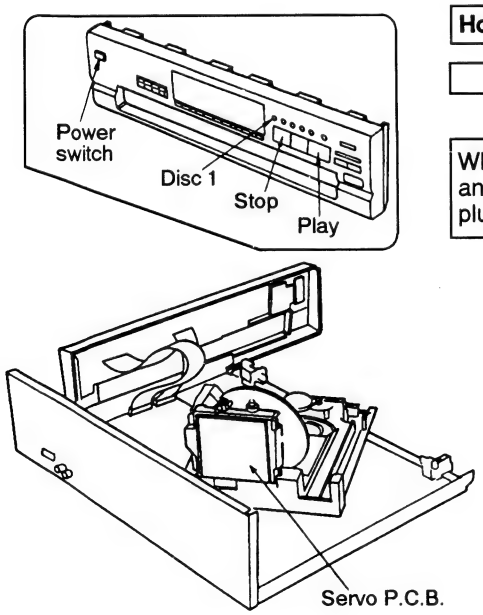

Fig. 7

How to play the disc

Unplug the set previously.

While pressing 3 keys of STOP(■), PLAY(▶), and DISC 1 simultaneously, insert the power plug of the set into the plug socket.

NOTE:
Be sure to begin pressing the 3 keys before plugging the set. Otherwise, the Service Mode cannot be set.

FL lights up?

No → Press the POWER key (POWER ON). → FL lights up.

Yes

Withdraw hand from the 3 keys.

Mount the disc on the turntable and press the PLAY key.

NOTE:
Make sure that the traverse mechanism is then in UP(PLAY)position.

Service Mode setting

When checking the main/servo P.C.B. of this set, remove the rotary tray previously.
After the rotary tray is removed, the microcomputer is kept from issuing PLAY command even when the PLAY key is pressed. Stated above is the procedure of setting the Service Mode for keeping the microcomputer in the PLAY mode even after removal of the rotary tray.

■ OPERATING THE UNIT WITHOUT THE FRONT PANEL ASS'Y
(OPERATION P.C.B. AND KEYS)

A Turning off the back-up power to the microprocessor(IC 401)

1. Unplug the AC cord.
2. Short the ends of the C401 jumpers at 10 Ω (5W) resistance for at least 1 second.

B Turning the power on again

1. Plug the AC cord back in.
2. Short the between the following jumpers simultaneously:
   - The D401 cathode and R401 from IC401 (equivalent to pressing the STOP button).
   - The D401 cathode and R403 from IC401 (equivalent to pressing the PLAY button).
   - The D402 cathode and R401 from IC401 (equivalent to pressing the DISC 1 button).
3. Keeping the above shorts in place, short between the D404 cathode and R405 from IC401 for 1 second to turn on the power to the main unit.
4. Remove the shorts placed in step 2.

C Using the machine

- To play, short between the D401 cathode and R403 from IC401 (equivalent to pressing the PLAY button).
- To pause, short between the D401 cathode and R402 from IC401 (equivalent to pressing the PAUSE button).
- To stop, short between the D401 cathode and R401 from IC401 (equivalent to pressing the STOP button).
- To move forward, short between the D402 cathode and R402 from IC401 (equivalent to pressing the F.SKIP button).
- To move backward, short between the D402 cathode and R403 from IC401 (equivalent to pressing the R.SKIP button).
- To search in the forward direction, short between the D403 cathode and R402 from IC401 (equivalent to pressing the F.SEARCH button).
- To search in the backward direction, short between the D403 cathode and R403 from IC401 (equivalent to pressing the R.SEARCH button).

D Finishing off

1. Unplug the AC cord.
2. Short the ends of the C401 jumpers at 10 Ω (5W) resistance.

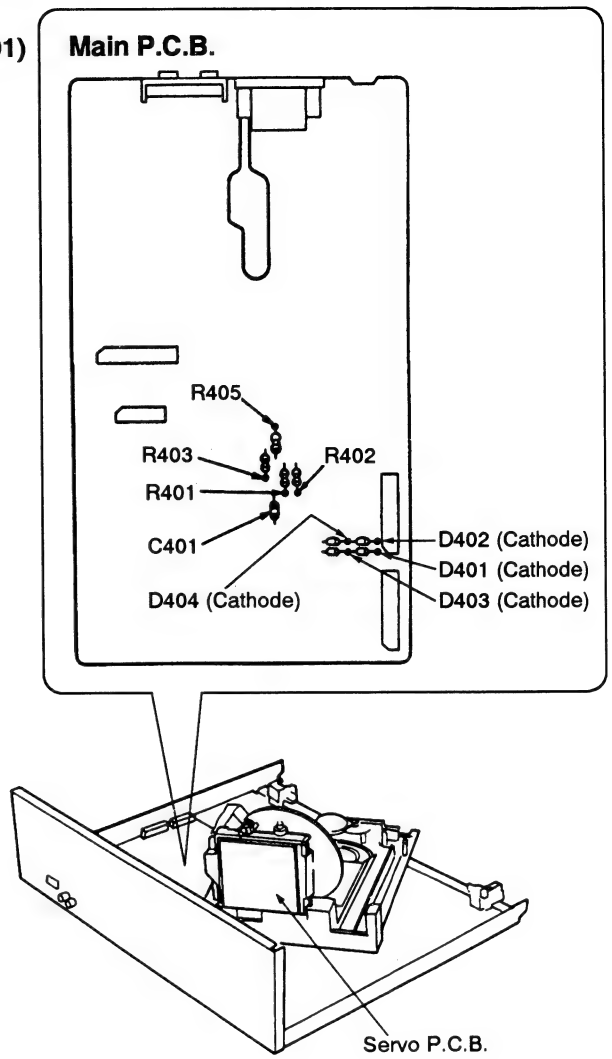

■ Installation of the FFC

- When connecting the FFC, connect as shown right.
- Connect as follows:
  Short FFC ; between Connector [S] and SHORT
  Long FFC ; between Connector [L] and LONG
- Connect the FFC (Long/Short) with blue line upward to the operation P.C.B. connectors .
- Connect the FFC (Long/Short) with blue line outward to the main P.C.B. connectors.

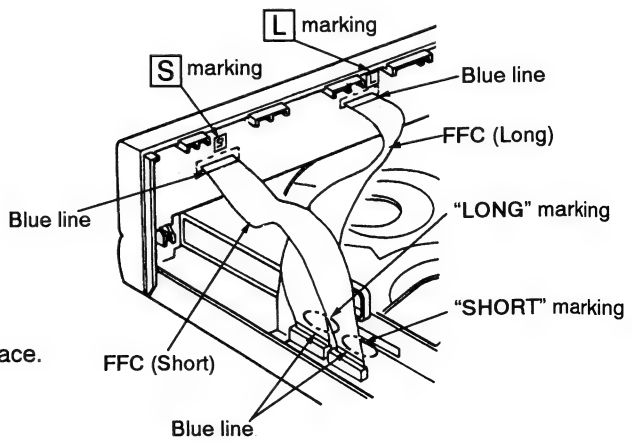

NOTE:
The pin numbers of each connector are marked on the P.C.B. surface.

■ AUTOMATIC ADJUSTMENT RESULTS DISPLAY FUNCTION
(SELF-CHECK FUNCTION)

The unit contains a function which displays the result of the automatically adjustment of the servo circuits (tracking, focus servo, etc.) as an error code on the FL display.
The error code display serves as a repair guide showing the automatically adjustment circuit is at fault. The procedures for displaying the error codes are given below.

• Procedures to display the error code

(1) Procedure to display the error code before disassembly (finished unit)
1. When the [POWER] key is pressed while holding down the [STOP (■)], [PAUSE (▮▮)] and [PLAY (▶)] keys simultaneously, the FL display illuminates, release the power turns on.
2. When the FL display illuminates, release the [STOP (■)], [PAUSE (▮▮)] and [PLAY (▶)] keys.
3. Press the [OPEN/CLOSE (▲)] key to open the disc tray and load the test disc (SZZP1054C).
4. Press the [PLAY (▶)] key to start the play operation.
5. After the time display appears, press the [STOP (■)] key to display the error code. (e.g. **E-0**)
6. The error code display can be used as a repair guide showing which servo circuit is at fault. (See Error Code Based Troubleshooting.)

(2) Procedure to display the error code when disassembled
1. Prepare the unit as described in "How to Check the Main and Servo P.C.B." on pages 19, 20.
2. Press the [POWER] key while holding down the [STOP (■)], [PLAY (▶)] and [DISC 1] keys simultaneously.
3. When the FL display illuminates, release the [STOP (■)], [PLAY (▶)] and [DISC 1] keys.
4. Load the test disc (SZZP1054C) on the turntable and secure it with the clamper ass'y.
5. Perform steps 4 and 5 in section (1) above.

• Error code based troubleshooting

※ The unit is satisfactory if the error code is **E-0** of **E-2**.
※ Before testing, check that the test disc is free of scratches and dirt and optical pickup is clean.

FL error code display	Symptom	Probable cause	Signal to check		Normal voltage and waveform values	
			Signal name	Location	PLAY	STOP
E-1	Focus and tracking offset adjustments not completed in the specified time period.	① Clocks X1 and X2, power supply VDD, and reset/RST, all on IC702 ② MDATA, MCLK, MLD, and SENSE signals to/from mechanism controller	MDATA	IC702 ⑧ pin		4.8V
			MCLK	IC702 ⑦ pin		4.8V
			MLD	IC702 ⑨ pin		
			SENSE	IC702 ⑩ pin	0V	0V
			/RST	IC702 ⑱ pin	4.9V	4.9V
			X1	IC702 ㊽ pin		
			X2	IC702 ㊾ pin		
E-3 E-5 E-7 E-9 E-B E-D E-F	Disc play unstable	① Scratches or contaminants on disc surface ② Focus and tracking servo circuits (check waveforms, voltages, and part values.) ③ Spindle driver circuit ④ Optical pickup	FE	IC702 ㉜ pin		2.4V
			TE	IC702 ㉝ pin		2.4V
			FOD	IC702 ㉘ pin	2.4V	2.4V
			TRD	IC702 ㉗ pin	2.4V	2.4V
			KICK	IC702 ㉖ pin	2.4V	2.4V
			/FLOCK	IC702 ⑪ pin	0V	4.9V
			/RF DET	IC702 ㊳ pin	0V	4.8V
			RF	TJ701		3.4V
			STAT	IC702 ⑰ pin	3.5V	0V
E-4 E-6 E-C E-E	Best Eye (PD Balance) adjustment not completed in the specified time period.	① Scratches or contaminants on disc surface ② Focus and Tracking servo circuit (check waveforms, voltages, and part values.) ③ Optical pickup	FBAL	IC702 ㉚ pin	2.5±1.25V	2.5±1.25V
			RF	TJ701	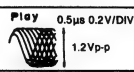	3.4V
			FE	IC702 ㉜ pin		0V
			/TLOCK	IC702 ⑫ pin	0V	0V
			OFT	IC702 ㊱ pin	0V	0V
E-8 E-A	Focus or Tracking gain adjustment not completed in the specified time period.	① Scratches or contaminants on disc surface ② Focus and Tracking servo circuit (check waveforms, voltages, and part values.) ③ Optical pickup	FE	IC702 ㉜ pin		2.4V
			TE	IC702 ㉝ pin		2.4V
			/TLOCK	IC702 ⑫ pin	0V	0V
			OFT	IC702 ㊱ pin	0V	0V

■ DIGITAL SERVO SYSTEM

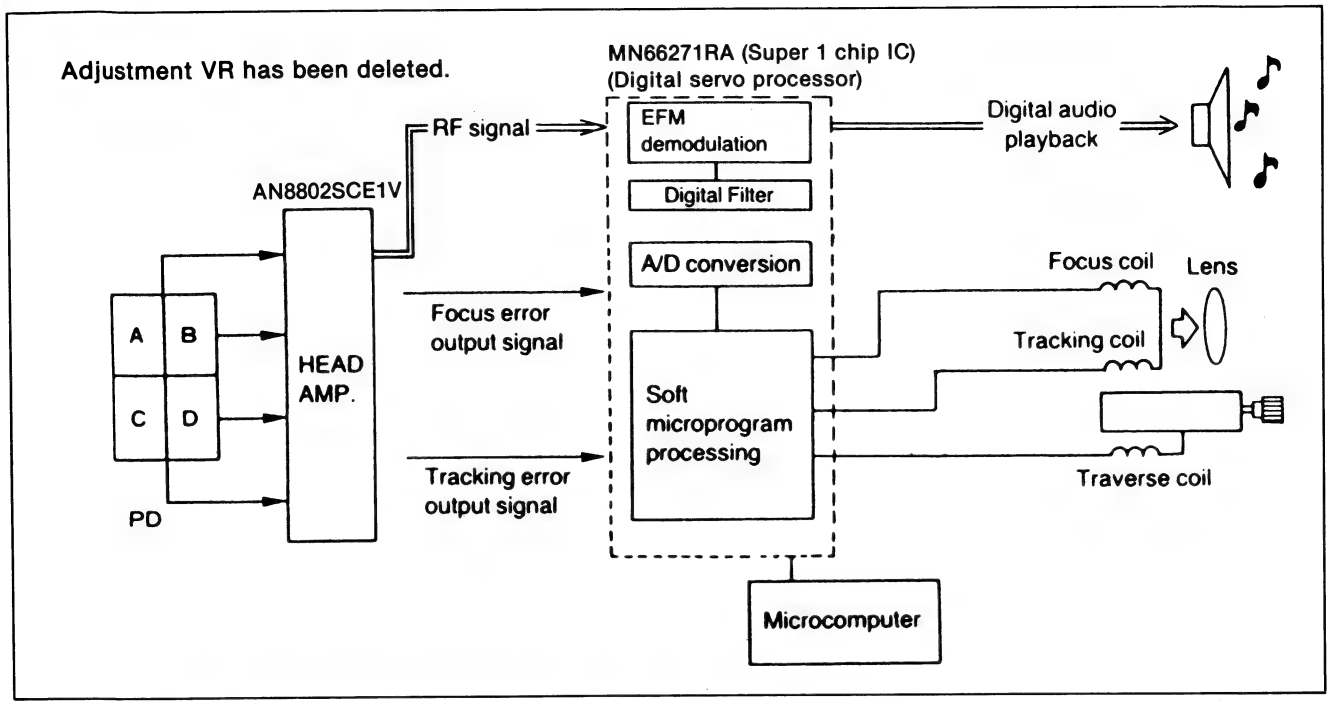

The following flow chart shows the sequence of automatic adjustments.

● Flow chart automatic adjustment sequence

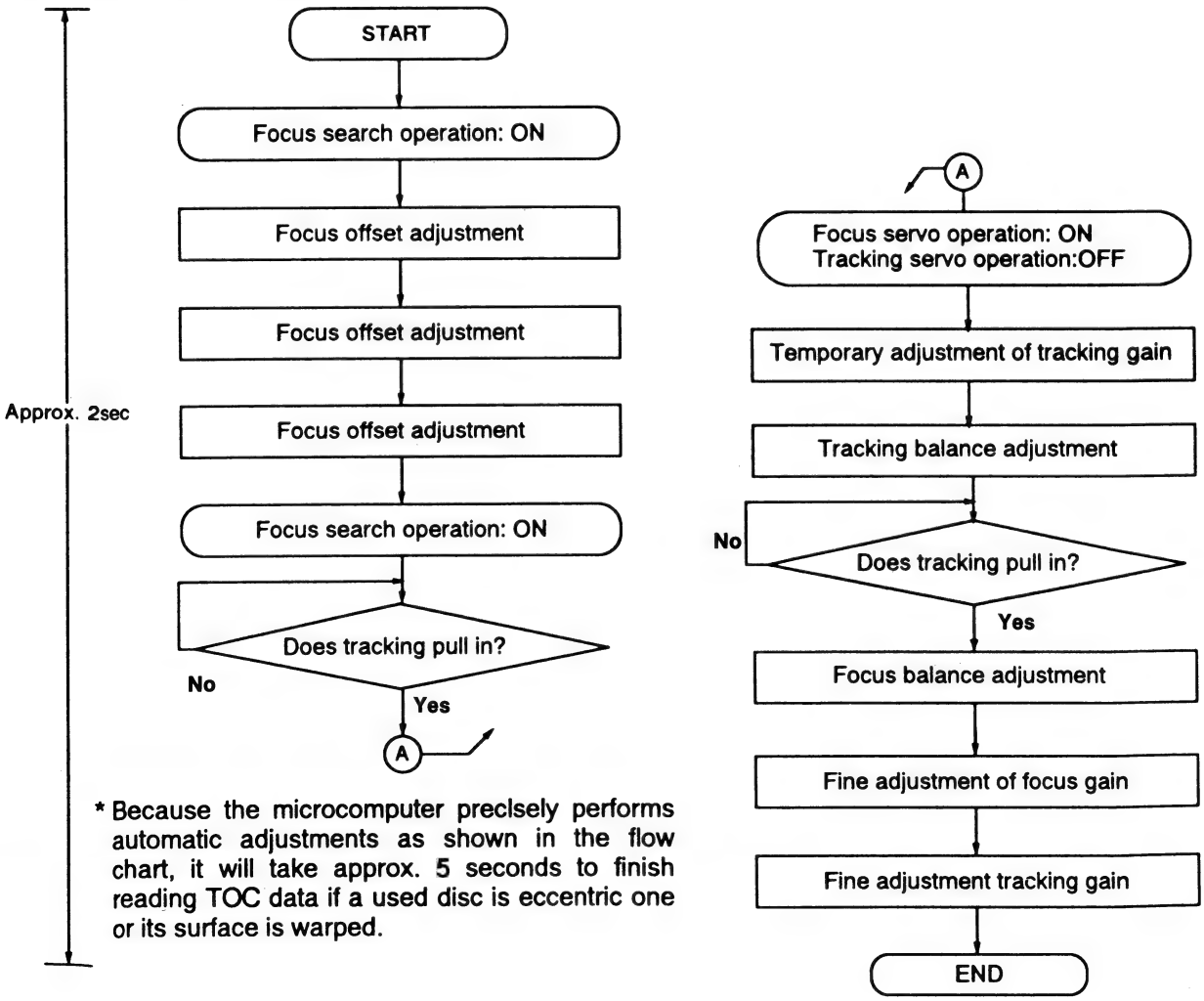

* Because the microcomputer precisely performs automatic adjustments as shown in the flow chart, it will take approx. 5 seconds to finish reading TOC data if a used disc is eccentric one or its surface is warped.

■ TROUBLESHOOTING

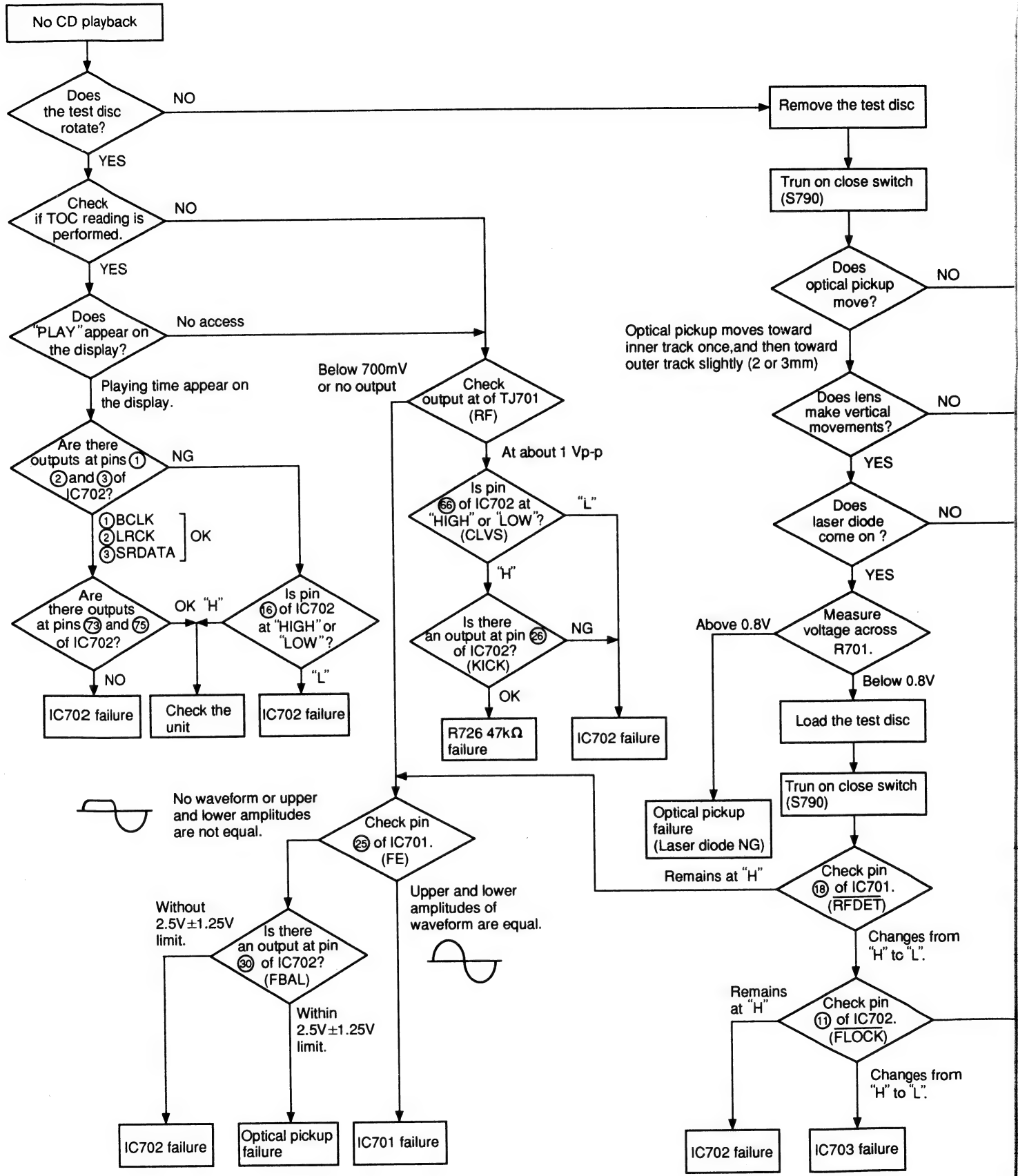

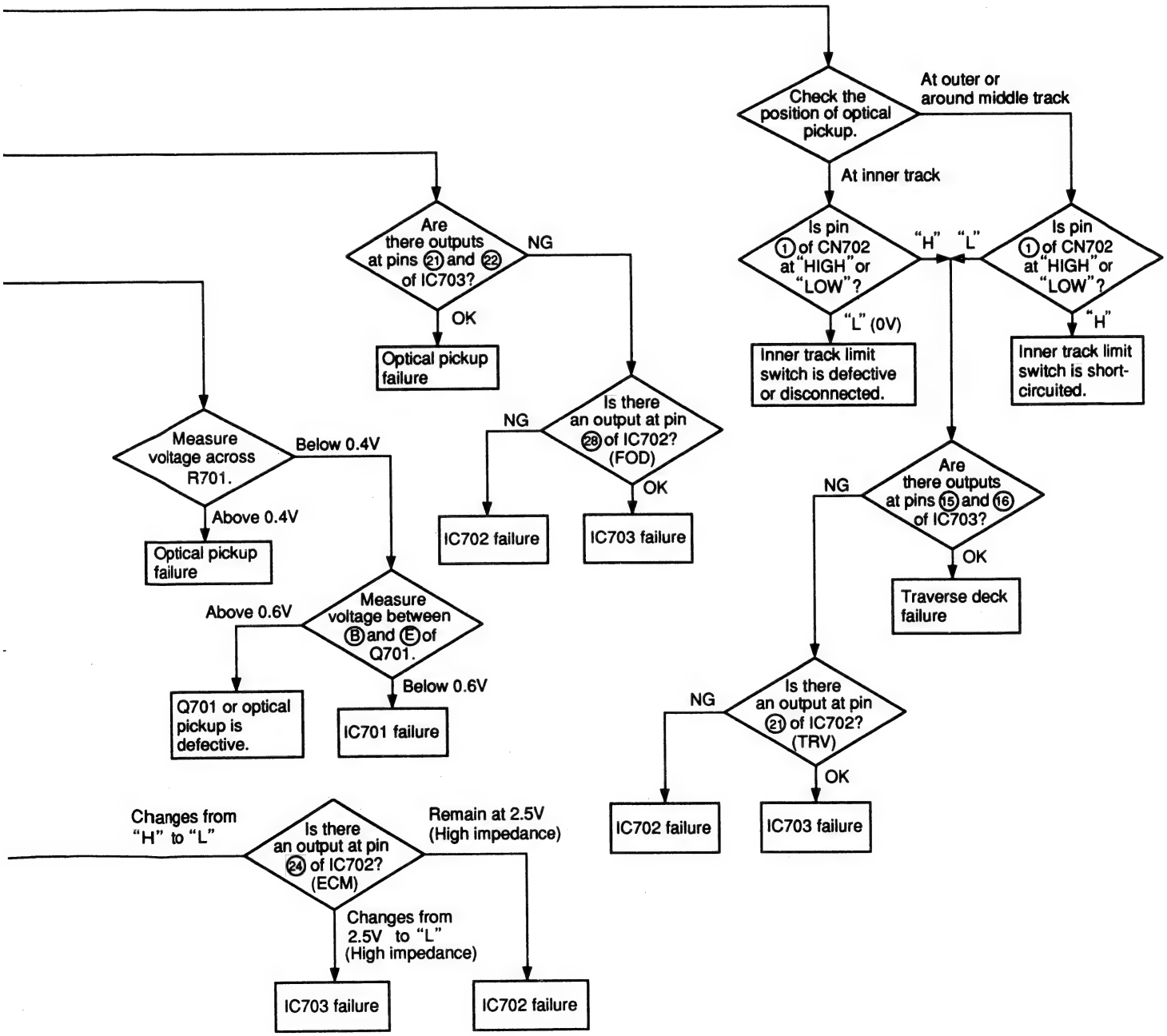
Check the position of optical pickup.
At outer or around middle track
At inner track
Is pin ① of CN702 at "HIGH" or "LOW"?
"H"
"L"
Is pin ① of CN702 at "HIGH" or "LOW"?
"L" (0V)
"H"
Inner track limit switch is defective or disconnected.
Inner track limit switch is short-circuited.
Are there outputs at pins ㉑ and ㉒ of IC703?
NG
OK
Optical pickup failure
Is there an output at pin ㉘ of IC702? (FOD)
NG
OK
IC702 failure
IC703 failure
Measure voltage across R701.
Below 0.4V
Above 0.4V
Optical pickup failure
Are there outputs at pins ⑮ and ⑯ of IC703?
NG
OK
Traverse deck failure
Measure voltage between Ⓑ and Ⓔ of Q701.
Above 0.6V
Below 0.6V
Q701 or optical pickup is defective.
IC701 failure
Is there an output at pin ㉑ of IC702? (TRV)
NG
OK
IC702 failure
IC703 failure
Changes from "H" to "L"
Is there an output at pin ㉔ of IC702? (ECM)
Remain at 2.5V (High impedance)
Changes from 2.5V to "L" (High impedance)
IC703 failure
IC702 failure

■ MEASUREMENTS AND ADJUSTMENTS

Warning: This product uses a laser diode. Refer to caution statements on page 2.
ACHTUNG: • Die lasereinheit nicht zerlegen.
• Die lasereinheit darf nur gegen eine vom hersteller spezifizierte einheit ausgetauscht werden.

Measuring Instruments and Special Tools

* Test discs
1. Playability test disc (SZZP1054C)
2. Uneven test disc (SZZP1056C)

* Musical program disc (ordinary)
* Dual-beam oscilloscope with bandwidth of 30MHz or better (with EXT. trigger and 1:1 probe).
* Allen wrench (M2.0) (SZZP1101C)
* Lock paint (RZZ0L01)

PREPARATION

1. Remove the cabinet and front panel ass'y (refer to "disassembly instructions" Ref. No. 1, 2).
2. Set the power switch to ON and press the open/close key to close the loading drawer.
3. Press the play key and when the traverse deck reaches it's height position, set the power switch to OFF.
4. Remove the tray ass'y (refer to "disassembly instructions" Ref. No. 5).
5. Remove the clamp plate, fixed plate, magnet and clamper (refer to "disassembly instructions" Ref. No. 10, 11).
6. Place the test disc and secure it by using clamper ass'y. (Refer to Fig. 1)
(refer to "disassembly instructions" Ref. No. 11).
7. Set the unit in the test mode as follows:
(hold the play, stop and disc 1 keys (3 keys) on and set the power switch to ON.)
8. Press the play key and play the test disc.
9. Follow the adjustment procedure.

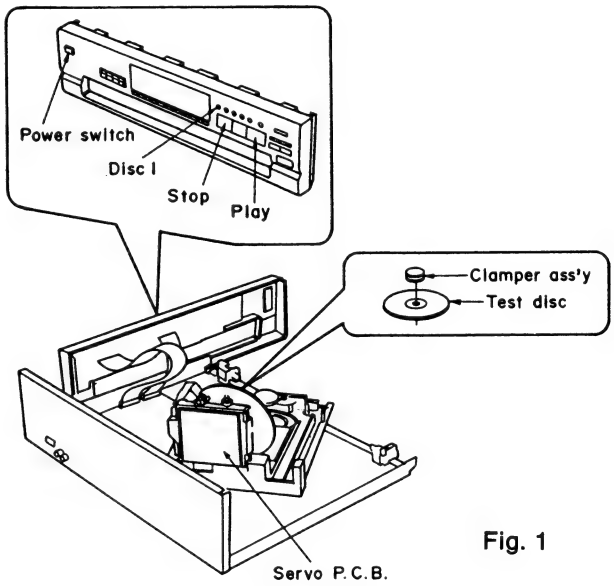

Fig. 1

(1) MECHANICAL ADJUSTMENT

1. Connect the oscilloscope's CH. 1 probe across TJ701 (RF) and TJ702 (VREF) on the servo P.C.B. (Refer to Fig. 3 on page 27)
Oscilloscope setting: VOLT 200mV
SWEEP..... 0.5μs.
Input coupling..... AC
2. Switch the player power **ON**, and play track **19** on the test disc (SZZP1056C).
(Playing any other track will prevent the HEX screws from being accessed.)
3. Leave the player in play mode and place it as shown Fig. 3.
4. Alternately adjust the two HEX screws with the 2.0mm allen wrench (SZZP1101C) until the vertical fluctuation of RF signal is minimized and the eye pattern is most stretched. (Refer to Fig. 2)
5. After completing the adjustment, lock the HEX screws with lock paint (RZZ0L01).

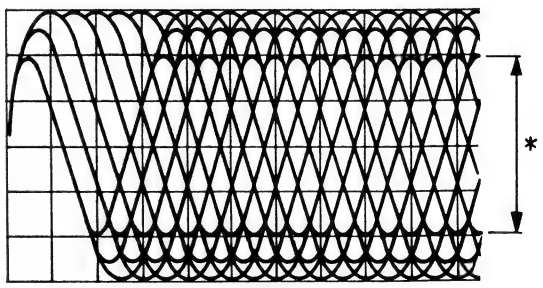

*Most stretched eye pattern.

Fig. 2

(2) CHECK OF PLAY OPERATION AFTER ADJUSTMENT

* **Checking Skip Search**

1. Play an ordinary musical program disc.
2. Press the skip button to check for normal skip search operation (in both the forward and reverse directions).

* **Checking Manual Search**

1. Play an ordinary musical program disc.
2. Press the manual search button to check for smooth manual search operations at either low or high speed (in both the forward and reverse directions).

* **Checking Playability**

1. Play the 0.7mm black dot and the 0.7mm wedge on the playability test disc (SZZP1054C) and verify that no sound skip or noise occurs.
2. Play the middle tracks of the uneven test disc (SZZP1056C) and verify that no sound skip or noise occurs.

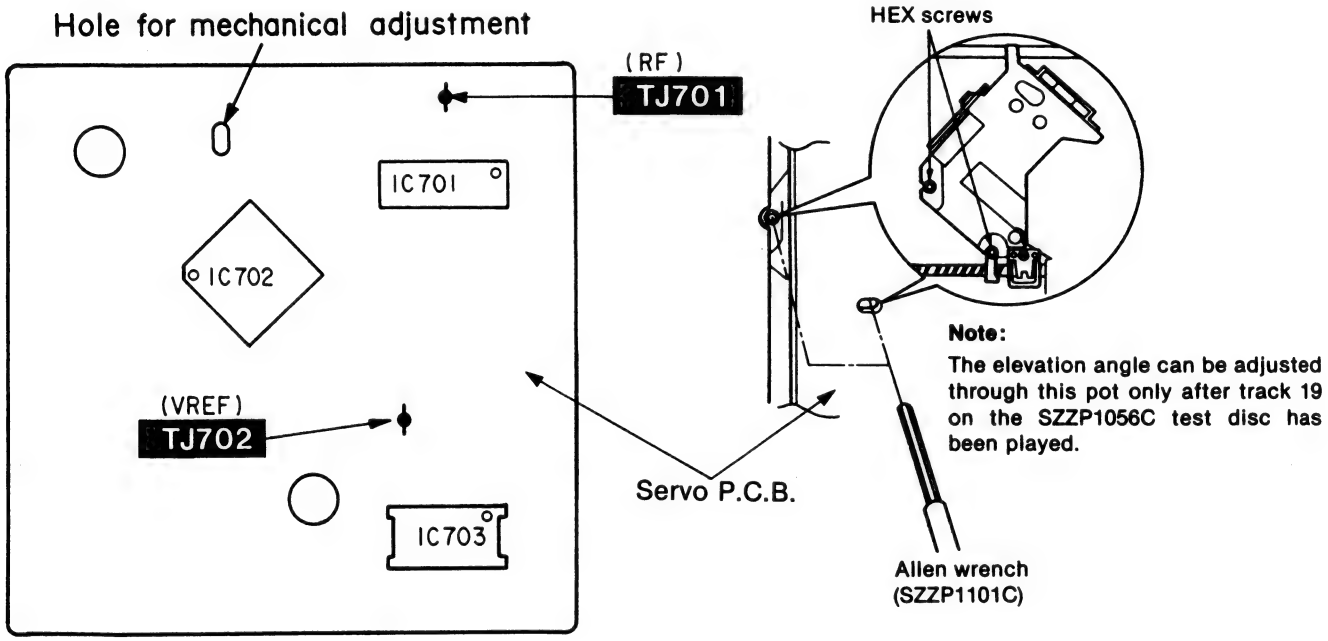

Fig. 3

TERMINAL GUIDE

• IC701 (AN8802SCE1V): Servo amp

Pin No.	Mark	I/O Division	Function
1	PDAD	I	Photo detector Bch input without delay
2	PDA	I	Photo detector Ach input without delay
3	LPD	I	Laser PD signal
4	LD	O	Laser power auto control output
5	AMPI	I	RF amp terminal
6	V_{CC}	I	Power supply terminal
7	AMPO	O	RF amp signal
8	CAGC	I	AGC detection capacitor input
9	ARF	O	RF signal
10	CENV	I	RF detect capacitor connection terminal
11	CEA	I	HPF-AMP capacitor connection terminal
12	GND	—	GND terminal
13	LDON	I	LD APC ON/OFF ("H": ON, "L": OFF)
14	TES	I	Tracking error shunt input ("H": shunt)
15	PLAY	I	Play signal ("H": ON, "L": OFF)
16	WVEL	I	Double velocity ("H": double, "L": single)

Pin No.	Mark	I/O Division	Function
17	BDO	O	Dropout detection control
18	/RFDET	O	RF det. signal ("L": det.)
19	CROSS	O	Tracking error zero cross output
20	OFTR	O	Off track detection ("H": det.)
21	VDET	O	Oscillation det. signal ("H": det.)
22	ENV	O	Envelope output terminal
23	TEBPF	I	Oscillation detect input terminal (Not used, open)
24	TE	O	Tracking error signal
25	FE	O	Focusing error signal
26	PTO	O	Potention amp output
27	PTI	I	Potention amp input
28	TBAL	I	Tracking balance adj. input
29	FBAL	I	Focus balance adj. input
30	VREF	O	Reference voltage output
31	PDB	I	Photo detector Ach input with delay
32	PDBD	I	Photo detector Bch input with delay

• IC703 (AN8389SE1): Focus coil/tracking coil/traverse motor/spindle motor drive

Pin No.	Mark	I/O Division	Function
1	V_{CC}	I	Power supply terminal
2	VREF	I	Reference voltage input
3	IN4	I	Motor driver (4) input
4	IN3	I	Motor driver (3) input
5	GND	—	GND terminal
6	NC	—	Not used, connected to GND
7	NRESET	O	Reset terminal
8	GND	—	GND terminal
9	IN2	I	Motor driver (2) input
10	PC2	I	PC2 (power cut) input
11	IN1	I	Motor driver (1) input
12	PC1	I	PC1 (power cut) input (Not used, open)

Pin No.	Mark	I/O Division	Function
13	$PV_{CC}1$	I	Driver power supply (1)
14	PGND1	—	Driver GND terminal (1)
15	D1−	O	Motor driver (1) output terminal (−)
16	D1+	O	Motor driver (1) output terminal (+)
17	D2−	O	Motor driver (2) output terminal (−)
18	D2+	O	Motor driver (2) output terminal (+)
19	D3−	O	Motor driver (3) output terminal (−)
20	D3+	O	Motor driver (3) output terminal (+)
21	D4−	O	Motor driver (4) output terminal (−)
22	D4+	O	Motor driver (4) output terminal (+)
23	PGND2	—	Driver GND terminal (2)
24	$PV_{CC}2$	I	Driver power supply (2)

• IC702 (MN66271RA): Servo processor/Digital signal processor/Digital filter/D/A converter

Pin No.	Mark	I/O Division	Function
1	BCLK	O	Serial bit clock terminal
2	LRCK	O	L/R discriminating signal
3	SRDATA	O	Serial data (Not used, open)
4	$DV_{DD}1$	I	Power supply (digital circuit) terminal
5	$DV_{SS}1$	—	GND (digital circuit) terminal
6	TX	O	Digital audio interface signal
7	MCLK	I	Command clock signal
8	MDATA	I	Command data signal
9	MLD	I	Command load signal ("L": LOAD)
10	SENSE	O	Sense signal (OFT, FESL, NACEND, NAJEND, POSAD, SFG)
11	/FLOCK	O	Optical servo condition (focus) ("L": lead-in)
12	/TLOCK	O	Optical servo condition (tracking) ("L": lead-in)
13	BLKCK	O	Sub-code block clock (f=75Hz) (Not used, open)
14	SQCK	I	Sub-code Q register clock
15	SUBQ	O	Sub-code Q data
16	DMUTE	I	Muting input ("H": MUTE) (Not used, connected to GND)
17	STAT	O	Status signal (CRC, CUE, CLVS, TTSTOP, FCLV, SQCK)
18	/RST	I	Reset signal ("L": reset)
19	SMCK	O	System clock (f=4.2336MHz) (Not used, open)
20	PMCK	O	Frequency division clock signal (Not used, open) ($f=\frac{1}{1.92}\times ck=88.2kHz$)
21	TRV	O	Traverse servo control
22	TVD	O	Traverse drive signal
23	PC	O	Turntable motor drive signal ("L": ON)
24	ECM	O	Turntable motor drive signal (Forced mode)
25	ECS	O	Turntable motor drive signal (Servo error signal)
26	KICK	O	Kick pulse output
27	TRD	O	Tracking drive signal output
28	FOD	O	Focus drive signal output
29	VREF	I	D/A drive output (TVD, ECS, TRD, FOD, FBAL, TBAL) normal voltage input terminal
30	FBAL	O	Focus balance adj. output (Not used, open)
31	TBAL	O	Tracking balance adj. output
32	FE	I	Focus error signal (analog input)
33	TE	I	Tracking error signal (analog input)
34	RFENV	I	RF envelope signal
35	VDET	I	Oscillation det. signal ("H": det.)
36	OFT	I	Off frack signal ("H": Off track)
37	TRCRS	I	Track cross signal input
38	/RFDET	I	RF detection signal ("L": detection)
39	BDO	I	Dropout detection signal ("H": dropout)
40	LDON	O	Laser power control ("H": ON)
41	TES	O	Tracking error shunt output ("H": dropout)
42	PLAY	O	Play signal ("H": play)

Pin No.	Mark	I/O Division	Function
43	WVEL	O	Double velocity status signal ("H": double)
44	ARF	I	RF signal input
45	IREF	I	Reference current input
46	DRF	I	DSL bias terminal (Not used, open)
47	DSLF	I/O	DSL loop filter terminal
48	PLLF	I/O	PLL loop filter terminal
49	VCOF	I/O	VCO loop filter terminal (Not used, open)
50	$AV_{DD}2$	I	Power supply (analog circuit) terminal (2)
51	$AV_{SS}2$	—	GND (analog circuit) terminal
52	EFM	O	EFM signal (Not used, open)
53	PCK	O	PLL extract clock (f=4.3218MHz)
54	PDO	O	Phase comparated signal of EFM and PCK (Not used, open)
55	SUBC	O	Sub-code serial output data (Not used, open)
56	SBCK	I	Sub-code serial input clock (Not used, connected to GND)
57	V_{SS}	—	GND terminal
58	X1	I	Crystal oscillator terminal (f=16.9344MHz)
59	X2	O	
60	V_{DD}	I	Power supply terminal
61	BYTCK	O	Byte clock signal (Not used, open)
62	/CLDCK	O	Sub-code frame clock signal (f CLDCK=7.35kHz: Normal) (Not used, open)

Pin No.	Mark	I/O Division	Function
63	FCLK	O	Crystal frame clock (Not used, open)
64	IPFLAG	O	Interpolation flag terminal
65	FLAG	O	Flag terminal
66	CLVS	O	Turntable servo phase synch. signal ("H": CLV, "L": Rough servo) (Not used, open)
67	CRC	O	Sub-code CRC check terminal ("H": OK, "L": NG)
68	DEMPH	O	De-emphasis ON signal ("H": ON) (Not used, open)
69	RESY	O	Re-synchronizing signal of frame sync. (Not used, open)
70	/RST2	I	Reset terminal after "MASH" circuit
71	/TEST	I	Test terminal (Normal: "H")
72	$AV_{DD}1$	I	Power supply (analog circuit) terminal (1)
73	OUTL	O	Lch audio signal
74	$AV_{SS}1$	—	GND (analog circuit) terminal (1)
75	OUTR	O	Rch audio signal
76	RSEL	I	Polarity direction control terminal of RF signal
77	CSEL	I	Frequency control terminal of crystal oscillator (Not used, connected to GND)
78	PSEL	I	Test terminal (Normal: "L")
79	MSEL	I	"SMCK" terminal frequency select ("L": SMCK=4.2336MHz)
80	SSEL	I	"SUBQ" terminal mode select ("H": Q code buffer)

• IC401 (UPD78044A058): System control & FL drive

Pin No.	Mark	I/O Division	Function
1 ⟆ 7	G7 ⟆ G1	O	Grid signal of FL display
8	VDD	I	Power supply terminal
9	MCLK	O	Command clock signal
10	MDATA	O	Command data signal
11	MLD	O	Command load signal ("L" LOAD)
12	SENSE	I	Sense signal
13	DMUTE	O	Muting control signal
14	SQCK	O	Sub-code Q register clock
15	NC	—	Not connected
16	SUBQ	I	Sub-code Q data
17	/RESET	I	Reset signal input
18	ZSENSE	—	Not used, connected to GND
19	REC. EN	I	Synchro. rec. control terminal
20	AVSS	—	GND terminal
21	/RSTSV	O	Reset signal output
22	OPEN	I	Open detect terminal
23	DIR	O	Motor control signal
24	TRUN	O	
25	LOAD	O	Motor control signal
26	DAC	O	Not used, open
27	RESTSW	I	Rest position de
28	UP/DOWN	I	Traverse deck up/down det. terminal
29	AVDD	I	Power supply terminal
30	AVREF	I	Power supply terminal
31	XT1	—	Not used, connected to GND
32	XT2	—	Not used, open
33	VSS	—	GND terminal
34	X1	I	Crystal Osc terminal (F: 4.2336 MHz)
35	X2	O	
36 ⟆ 42	KEYIN 7 ⟆ KEYIN 1	I	Key return signal
43	PWM	O	Motor control signal
44	POFF	I	Power det. terminal
45	POSITION	I	Rotary tray position det. terminal
46	SPEED	I	Loading motor speed sensor signal
47	REMOCON	I	Remote control signal input
48	IC	—	Not used, connected to GND
49	/TLOCK	I	Optical servo condition (tracking) input
50	/FLOCK	I	Optical servo condition (focus) input
51	STAT	I	Status signal (CRC, CUE, CLVS, TTSTOP, FCLV, SQCK)
52	VDD	I	Power supply terminal
53	POWER	O	Power ON/OFF output terminal
54	SYNCHRO	—	Not used, open
55 ⟆ 60	KEYOUT 6 ⟆ KEYOUT 1	O	Key scan signal
61 ⟆ 70	S16 ⟆ S7	O	Segment signal of FL display
71	VPP	I	Power supply terminal
72 ⟆ 77	S6 ⟆ S1	O	Segment signal of FL display
78	EXDATA	O	Not used, open
79	EXCLK	O	Not used, open
80	G8	O	Grid signal of FL display

■ BLOCK DIAGRAM

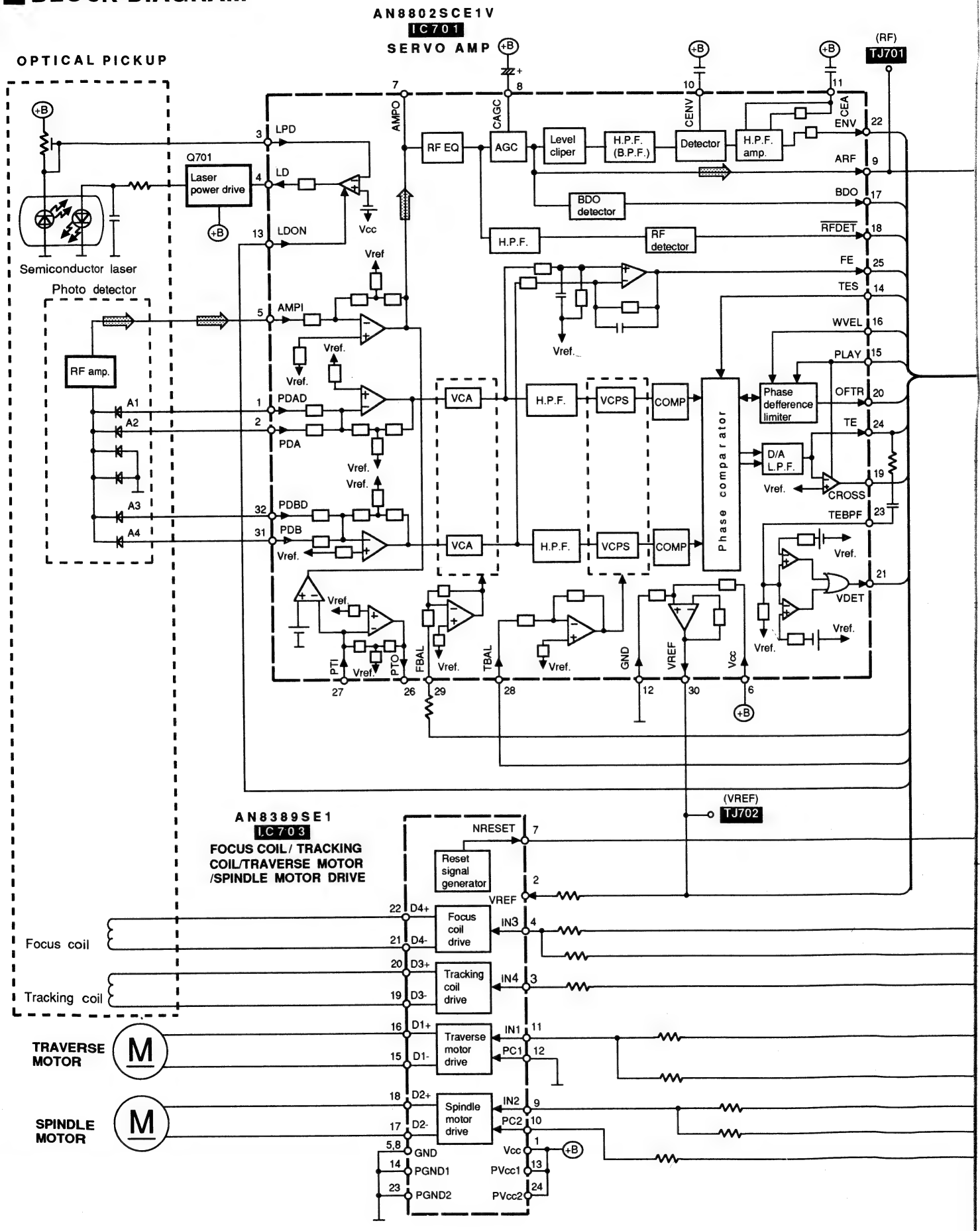

MN66271RA

IC702

SERVO PROCESSOR / DIGITAL SIGNAL PROCESSOR / DIGITAL FILTER / D/A CONVERTER

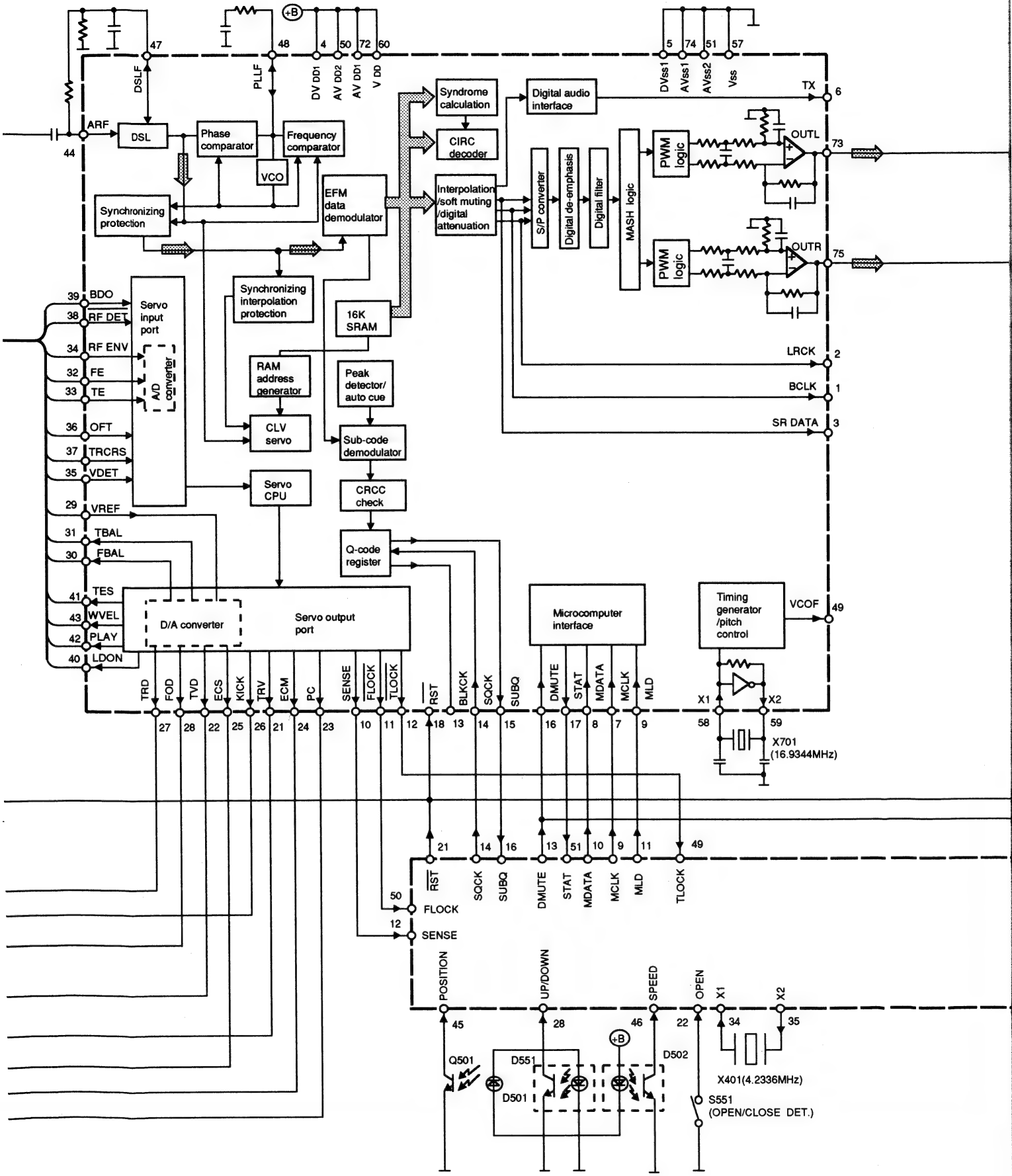

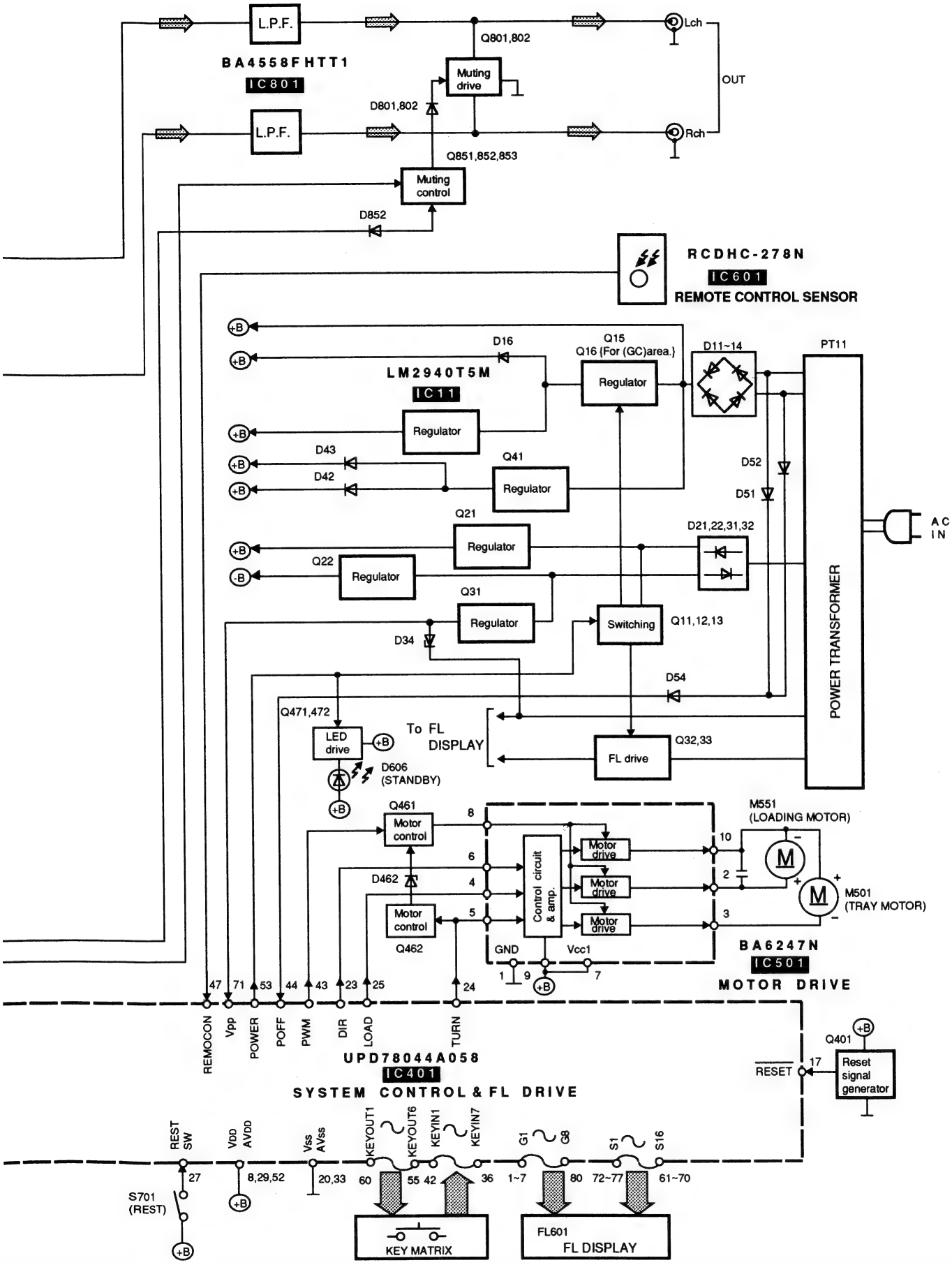

Note:

⇨ Audio signal

■ SCHEMATIC DIAGRAM (Parts list on pages 46, 47, 52, 53.)

(This schematic diagram may be modified at any time with development of new technology.)

Note:

- **S11** : Voltage adj. switch in "240V" position. (For (GC) area only.) (110V ↔ 127V ↔ 220V ↔ 240V)
- **S551** : Disc tray "Open/Close" detector switch.
- **S601** : Time mode (TIME MODE) switch.
- **S602** : Spiral (SPIRAL) switch.
- **S603** : Random mode (RANDOM MODE) switch.
- **S604** : Repeat (REPEAT) switch.
- **S607** : Stop (■) switch.
- **S608** : Pause (▮▮) switch.
- **S609** : Play (▶) switch.
- **S610~S614**: Disc (DISC 1~5) switches. (S610: 1, S611: 2, S612: 3, S613: 4, S614: 5)
- **S615** : Disc skip (DISC SKIP) switch.
- **S616** : Program mode (PROGRAM MODE) switch.
- **S617, 618** : Search (SEARCH) switches. (S617: ◀◀, S618: ▶▶)
- **S619, 620** : Skip (SKIP) switches. (S619: |◀◀, S620: ▶▶|)
- **S621** : Loading drawer open/close (▲ OPEN/CLOSE) switch.
- **S631** : Power "STANDBY /ON" (POWER, STANDBY ON) switch.
- **S651~S662**: Numeric (1~10, 0, > 10) switches. S651: (1), S652: (2), S653: (3), S654: (4), S655: (5), S656: (6), S657: (7), S658: (8), S659: (9), S660: (10), S661: (> 10), S662: (0)
- **S701** : Rest detector.

- The voltage value and waveforms are the reference voltage of this unit measured by DC electronic voltmeter (high impedance) and oscilloscope on the basis of chassis.
  Accordingly, there may arise some error in voltage values and waveforms depending upon the internal impedance of the tester or the measuring unit.

*The parenthesized are the values of voltage generated during playing (Test disc 1kHz, L+R, 0dB), others are voltage values in stop mode.

- Important safety notice:
  Components identified by ⚠ mark have special characteristics important for safety. Furthermore, special parts which have purposes of fire-retardant (resistors), high-quality sound (capacitors), low-noise (resistors), etc. are used as occation calls. When replacing any of components, be sure to use only manufacturer's specified parts shown in the parts list.
- The supply part number is described alone in the replacement parts.

Part No.	Production Part No.	Supply Part No.
IC11	LM2940T5M	LM2940T5

- ▬▬ / ▬ ▬ ▬ : Positive voltage lines and negative voltage lines.
  ⇨ : audio signal lines.

Caution!

IC and LSI are sensitive to static electricity.
Secondary trouble can be prevented by taking care during repair.

- Cover the parts boxes made of plastics with aluminum foil.
- Ground the soldering iron.
- Put a conductive mat on the work table.
- Do not touch the pins of IC or LSI with fingers directly.

• Terminal guide of IC's, transistors and diodes.

BA4558FHTT1

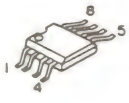

AN8802SCE1V

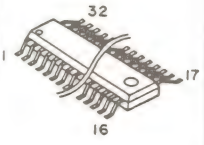

AN8389SE1

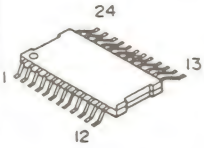

MN66271RA

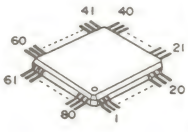

UPD78044A058

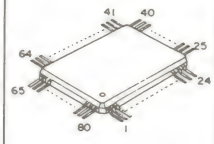

BA6247N

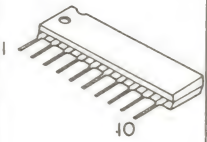

LM2940T5M

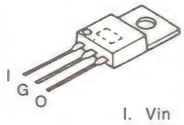

I. Vin
G. GND
O. Vout

2SA1309AIQST
2SC3311AIQST
2SD1450RSTTA
UN4112AITA
UN4114TA
UN4212AITA
UN4214AITA
UN4215TA

2SD2037EFTA

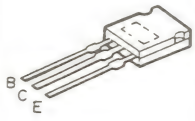

2SB1238QSTV6
2SD1862QRTV6

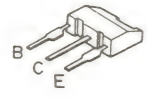

PT381TB

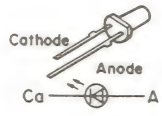

2SB709STW

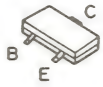

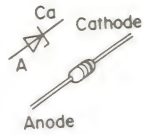

MA4051MTA
MA4062MTA
MA4068HTA
MA4091MTA
MA4056MTA

MA4100MTA
MA4270MTA

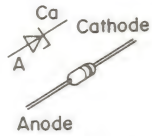

RL1N4003N02

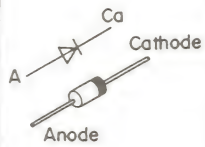

MA165TA

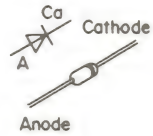

GL380TB

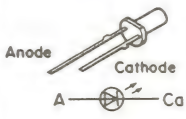

RCDHC-278N

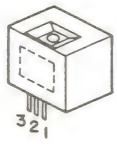

RSQGP1S53V

SG-206S

LN018304P

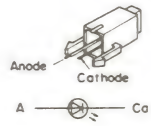

1SS291TA

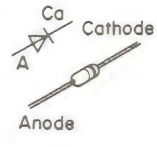

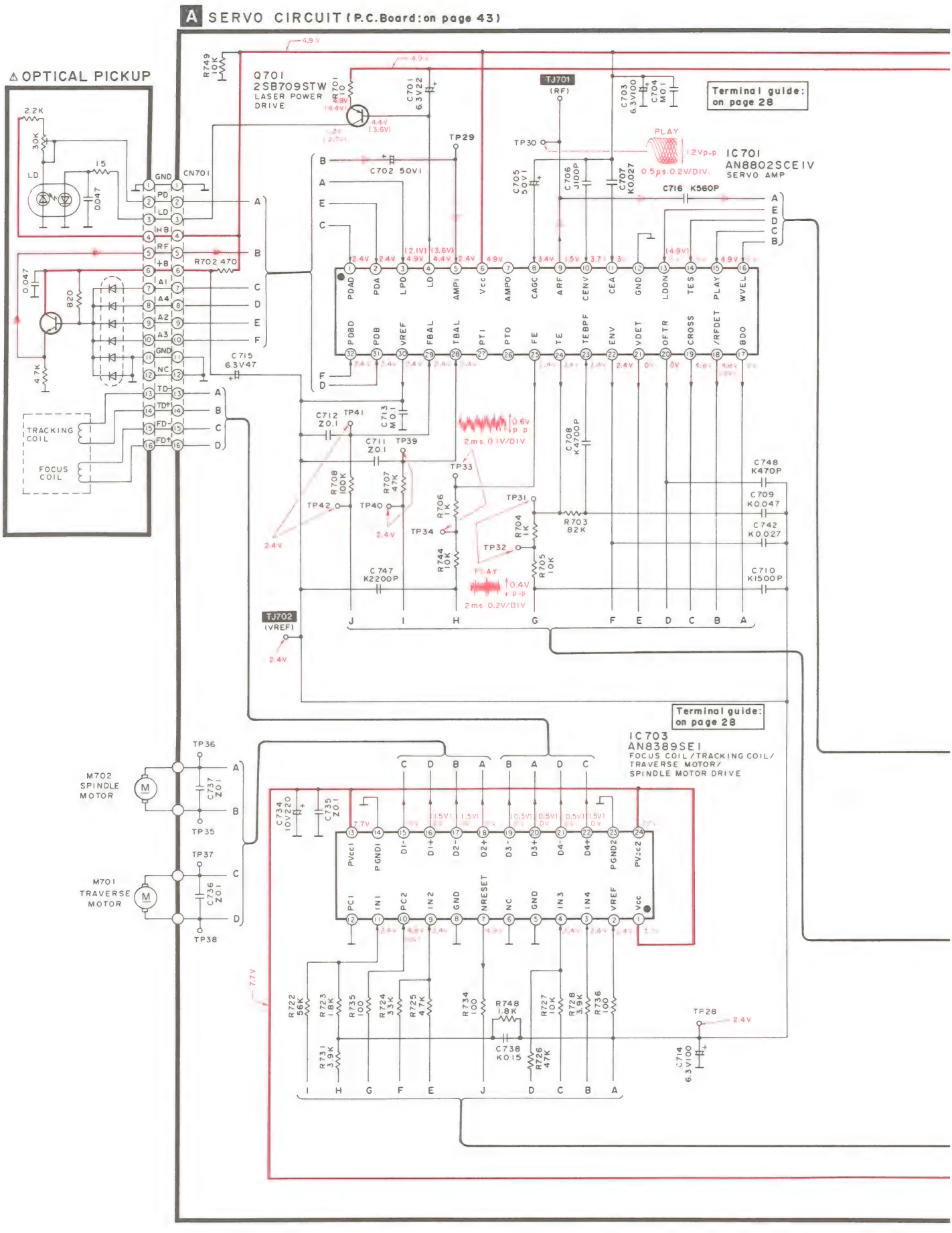
A SERVO CIRCUIT (P.C.Board: on page 43)
⚠ OPTICAL PICKUP
Q701
2SB709STW
LASER POWER
DRIVE
IC701
AN8802SCE IV
SERVO AMP
IC703
AN8389SE I
FOCUS COIL / TRACKING COIL /
TRAVERSE MOTOR /
SPINDLE MOTOR DRIVE
Terminal guide:
on page 28
TJ701
(RF)
TJ702
(VREF)
CN701
TRACKING
COIL
FOCUS
COIL
M702
SPINDLE
MOTOR
M701
TRAVERSE
MOTOR
PLAY
1.2Vp-p
0.5μs 0.2V/DIV
2ms 0.1V/DIV
2ms 0.2V/DIV
R749 10K
R701 10
C701 6.3V22
C702 50V1
C703 6.3V100
C704 M01
C705 50V1
C706 J100P
C707 K0027
C716 K560P
C715 6.3V47
C712 Z0.1
C713 M01
C711 Z0.1
C708 K4700P
C748 K470P
C709 K0.047
C742 K0.027
C710 K1500P
C747 K2200P
C734 10V220
C735 Z0.1
C737 Z01
C736 Z01
C714 6.3V100
C738 K015
R702 470
R708 100K
R707 47K
R706 1K
R704 1K
R703 82K
R744 10K
R705 10K
R722 56K
R723 1.8K
R735 100
R724 3.3K
R725 4.7K
R734 100
R748 1.8K
R727 10K
R728 3.9K
R736 100
R731 3.9K
R726 47K
TP28
TP29
TP30
TP31
TP32
TP33
TP34
TP35
TP36
TP37
TP38
TP39
TP40
TP41
TP42

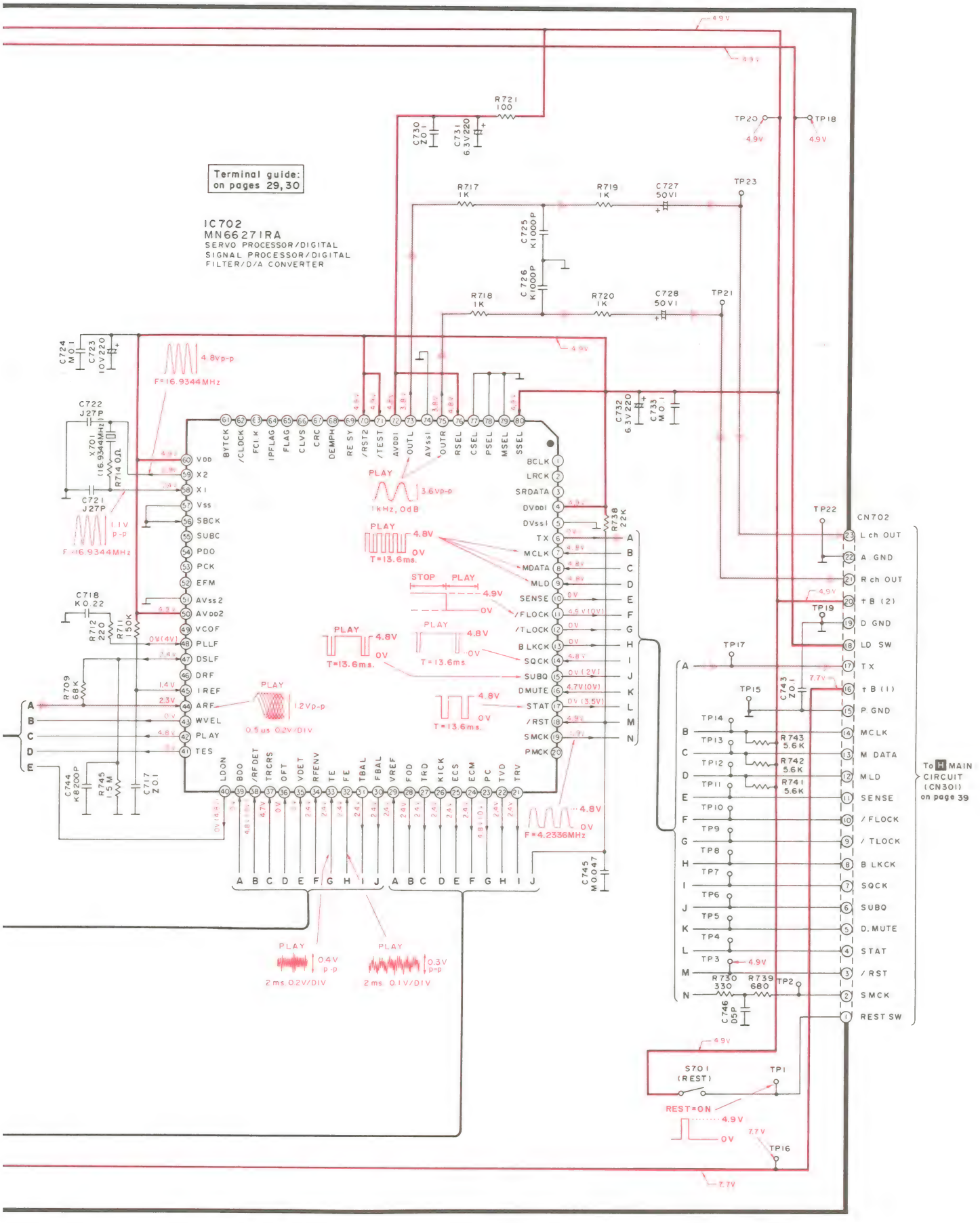
Terminal guide:
on pages 29, 30
IC702
MN6627IRA
SERVO PROCESSOR/DIGITAL
SIGNAL PROCESSOR/DIGITAL
FILTER/D/A CONVERTER
CN702
To H MAIN CIRCUIT (CN301) on page 39
S701 (REST)
REST=ON
F=16.9344MHz
F=4.2336MHz
PLAY
STOP
TP1
TP2
TP3
TP4
TP5
TP6
TP7
TP8
TP9
TP10
TP11
TP12
TP13
TP14
TP15
TP16
TP17
TP18
TP19
TP20
TP21
TP22
TP23

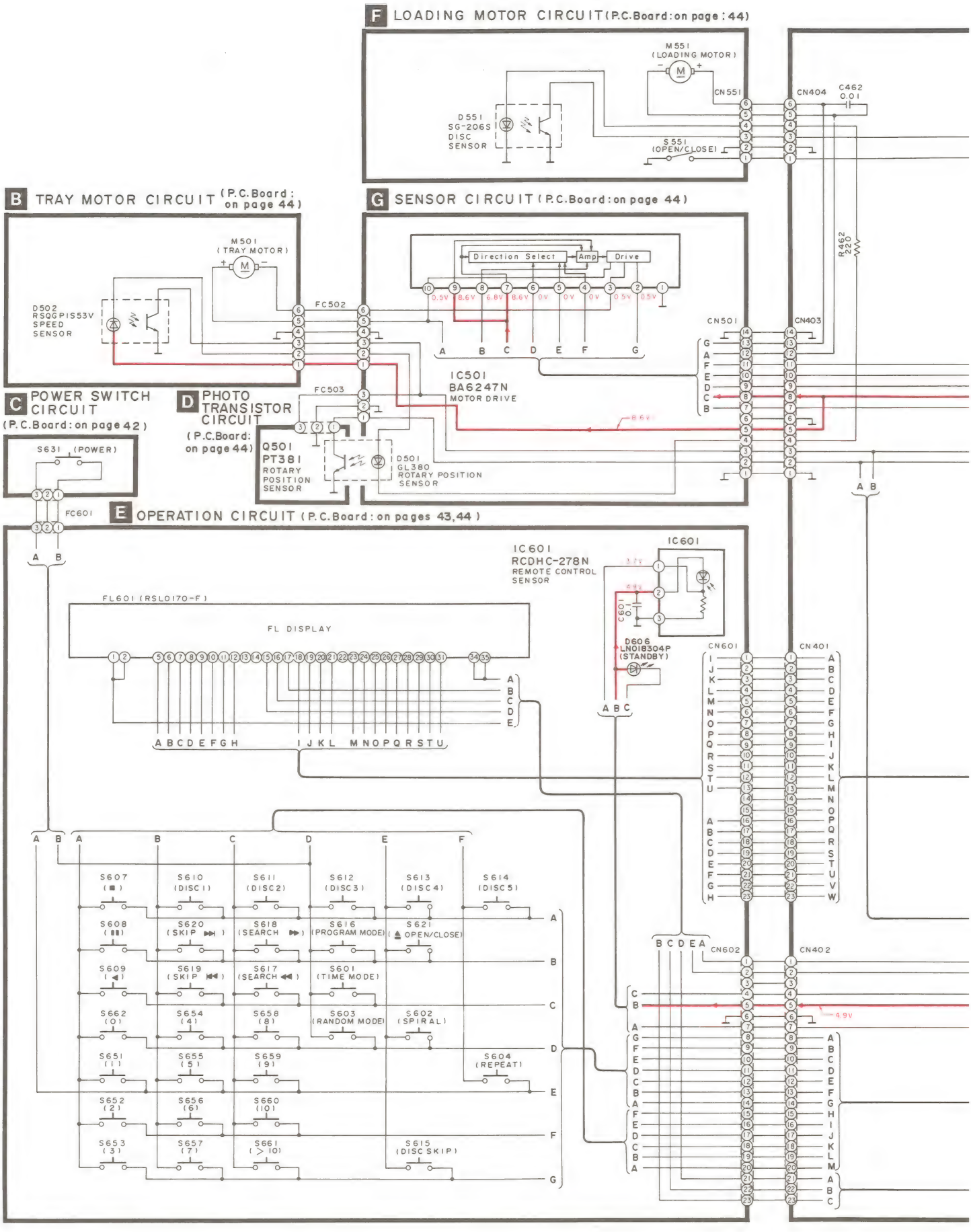
F LOADING MOTOR CIRCUIT (P.C.Board: on page : 44)
M551 (LOADING MOTOR)
CN551
D551 SG-206S DISC SENSOR
S551 (OPEN/CLOSE)
CN404
C462 0.01
B TRAY MOTOR CIRCUIT (P.C.Board : on page 44)
M501 (TRAY MOTOR)
D502 RSQGPIS53V SPEED SENSOR
FC502
G SENSOR CIRCUIT (P.C.Board: on page 44)
Direction Select
Amp
Drive
0.5V 8.6V 6.8V 8.6V 0V 0V 0V 0.5V 0.5V
A B C D E F G
IC501 BA6247N MOTOR DRIVE
CN501
CN403
R462 220
C POWER SWITCH CIRCUIT (P.C.Board: on page 42)
S631 (POWER)
FC601
D PHOTO TRANSISTOR CIRCUIT (P.C.Board: on page 44)
FC503
Q501 PT381 ROTARY POSITION SENSOR
D501 GL380 ROTARY POSITION SENSOR
8.6V
E OPERATION CIRCUIT (P.C.Board: on pages 43,44)
IC601 RCDHC-278N REMOTE CONTROL SENSOR
IC601
C601 0.1
D606 LN01B304P (STANDBY)
FL601 (RSL0170-F)
FL DISPLAY
A B C D E F G H I J K L M N O P Q R S T U
CN601
CN401
CN602
CN402
4.9V
S607 (■)
S610 (DISC1)
S611 (DISC2)
S612 (DISC3)
S613 (DISC4)
S614 (DISC5)
S608 (■■)
S620 (SKIP ▶▶|)
S618 (SEARCH ▶▶)
S616 (PROGRAM MODE)
S621 (▲ OPEN/CLOSE)
S609 (◀)
S619 (SKIP |◀◀)
S617 (SEARCH ◀◀)
S601 (TIME MODE)
S662 (0)
S654 (4)
S658 (8)
S603 (RANDOM MODE)
S602 (SPIRAL)
S651 (1)
S655 (5)
S659 (9)
S604 (REPEAT)
S652 (2)
S656 (6)
S660 (10)
S653 (3)
S657 (7)
S661 (>10)
S615 (DISC SKIP)

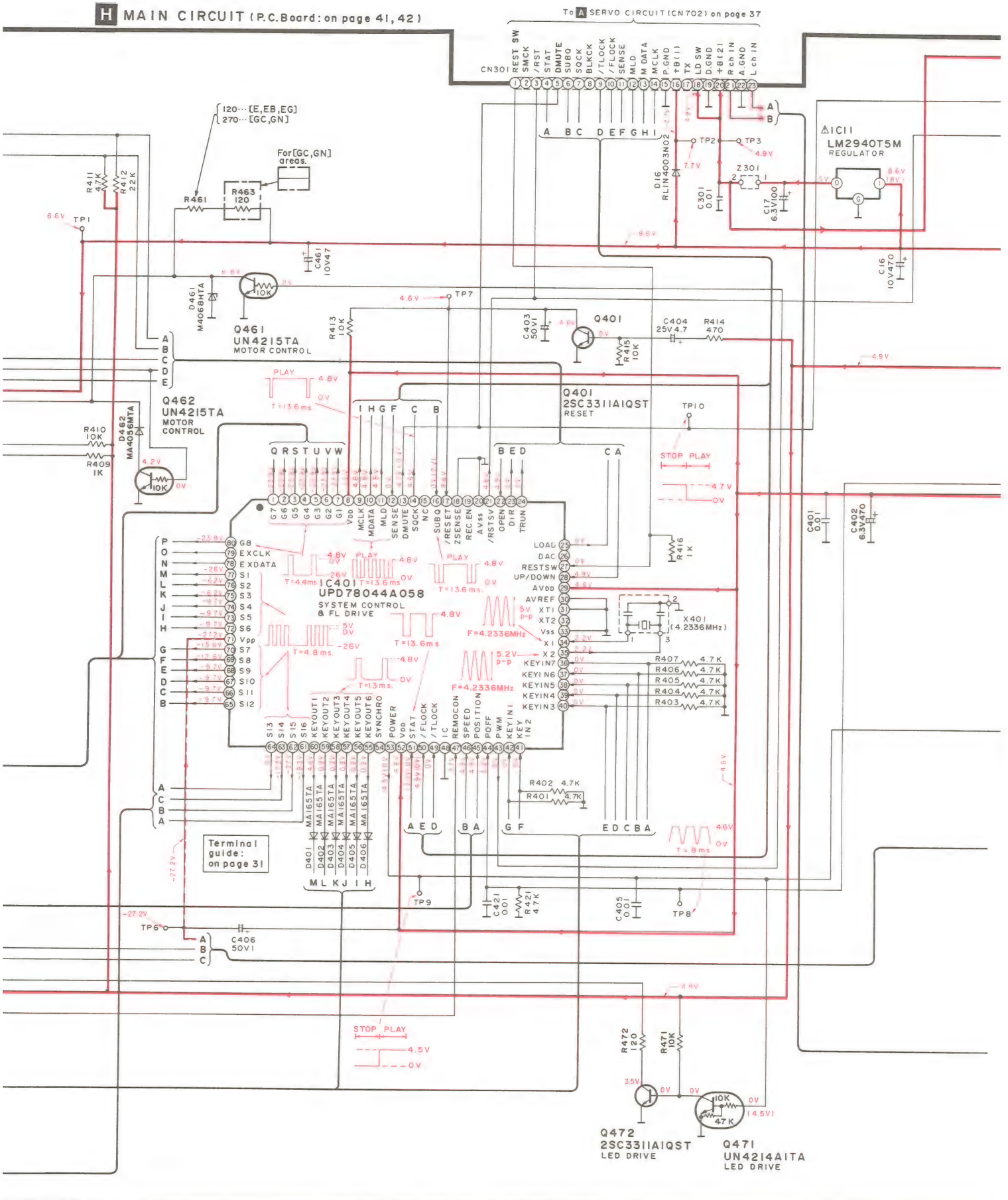
H MAIN CIRCUIT (P.C.Board: on page 41, 42)
To A SERVO CIRCUIT (CN702) on page 37
CN301
REST SW
SMCK
/RST
STAT
DMUTE
SUBQ
SQCK
BLKCK
/TLOCK
/FLOCK
SENSE
MLD
M DATA
MCLK
P.GND
+B(1)
TX
LD SW
D.GND
+B(2)
R ch IN
A.GND
L ch IN
120···[E,EB,EG]
270···[GC,GN]
For[GC,GN] areas.
R461
R463 120
R411 4.7K
R412 22K
TP1
8.6V
C461 10V47
D461 M4068HTA
Q461 UN4215TA MOTOR CONTROL
R413 10K
TP7
4.6V
C403 50V1
Q401
C404 25V4.7
R414 470
R415 10K
Q401 2SC3311AIQST RESET
Q462 UN4215TA MOTOR CONTROL
D462 MA4056MTA
R410 10K
R409 1K
TP10
STOP PLAY
4.7V
0V
R416 1K
C401 0.01
C402 6.3V470
IC401 UPD78044A058 SYSTEM CONTROL & FL DRIVE
T=4.4ms
T=13.6ms
T=4.8ms
T=1ms
T=8ms
F=4.2336MHz
X401 (4.2336MHz)
R407 4.7K
R406 4.7K
R405 4.7K
R404 4.7K
R403 4.7K
R402 4.7K
R401 4.7K
D401 MA165TA
D402 MA165TA
D403 MA165TA
D404 MA165TA
D405 MA165TA
D406 MA165TA
Terminal guide: on page 31
TP9
TP8
C421 0.01
R421 4.7K
C405 0.01
TP6
C406 50V1
R472 120
R471 10K
Q472 2SC3311AIQST LED DRIVE
Q471 UN4214AITA LED DRIVE
ICI1 LM2940T5M REGULATOR
Z301
D16 RLN4003NO2
TP2
TP3
4.9V
C301 0.01
C17 6.3V100
C16 10V470

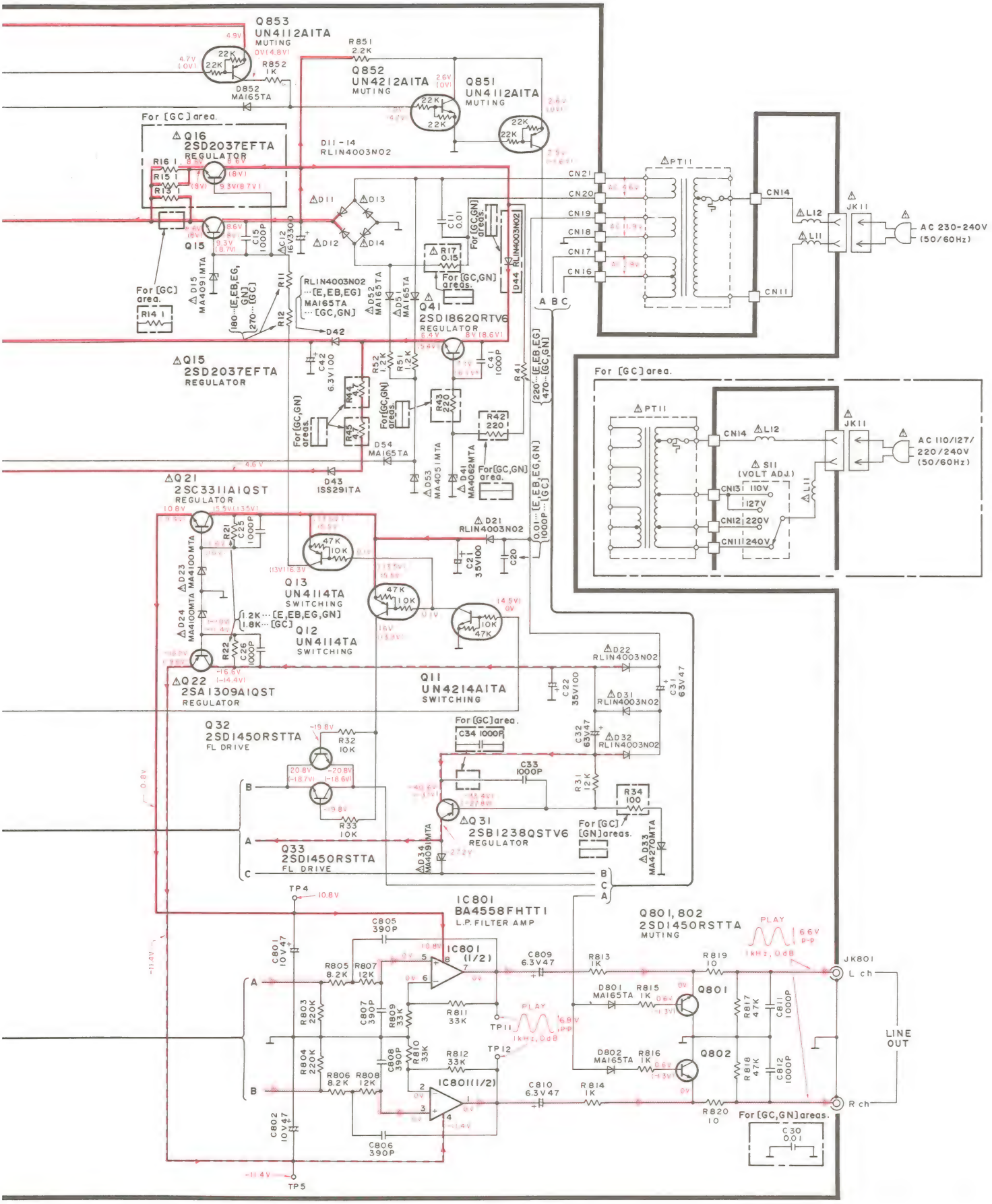
Q853
UN4112A1TA
MUTING
Q852
UN4212A1TA
MUTING
Q851
UN4112A1TA
MUTING
For [GC] area.
Q16
2SD2037EFTA
REGULATOR
D11-14
RLIN4003N02
Q15
Q41
2SD1862QRTV6
REGULATOR
Q15
2SD2037EFTA
REGULATOR
Q21
2SC3311A1QST
REGULATOR
Q13
UN4114TA
SWITCHING
Q12
UN4114TA
SWITCHING
Q22
2SA1309A1QST
REGULATOR
Q11
UN4214A1TA
SWITCHING
Q32
2SD1450RSTTA
FL DRIVE
Q31
2SB1238QSTV6
REGULATOR
Q33
2SD1450RSTTA
FL DRIVE
IC801
BA4558FHTT1
L.P. FILTER AMP
Q801, 802
2SD1450RSTTA
MUTING
PT11
JK11
AC 230-240V
(50/60Hz)
AC 110/127/
220/240V
(50/60Hz)
S11
(VOLT ADJ.)
JK801
L ch
R ch
LINE
OUT
For [GC,GN] areas.
TP4
TP5
TP11
TP12

■ PRINTED CIRCUIT BOARDS

(This printed circuit board diagram may be modified at any time with the development of new technology.)

H MAIN P.C.B. (REPI722B-M··· (E, EB, EG) / REPI722C-M··· (GN) / REPI722J-M··· (GC))

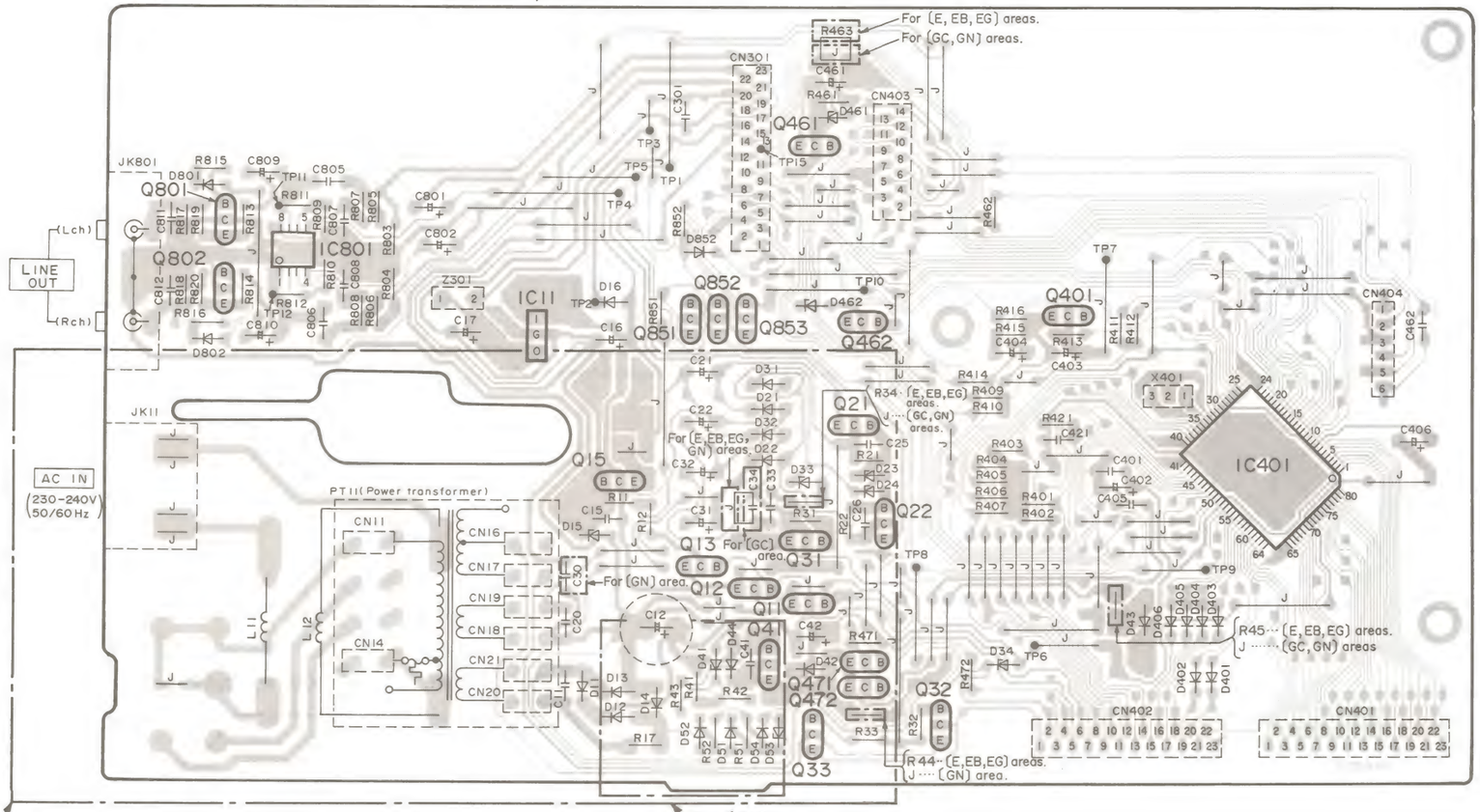

C POWER SWITCH P.C.B. (REPI723C-S)

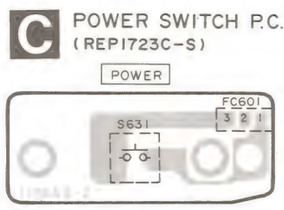

A SERVO P.C.B (REP1650A-N)

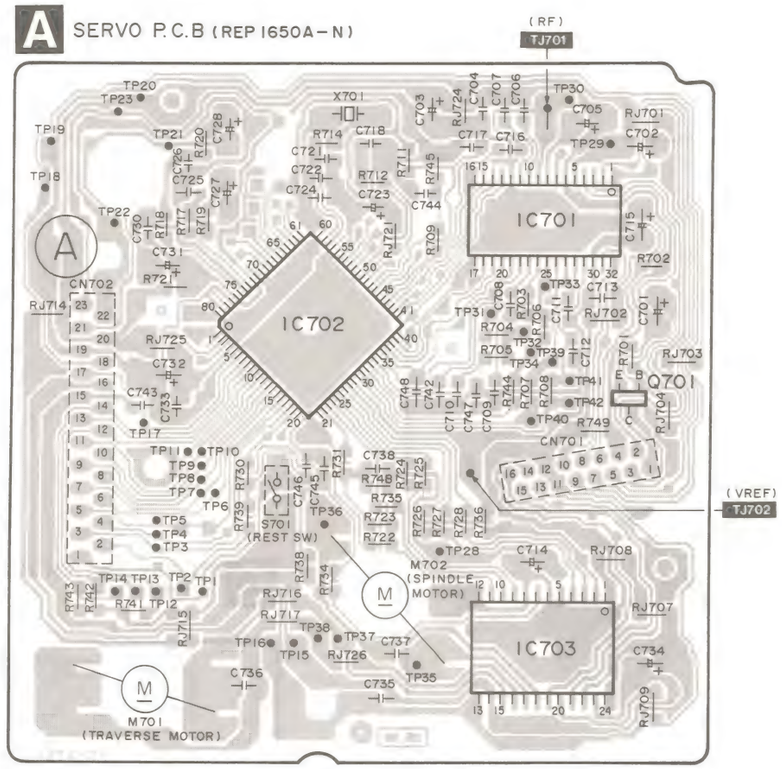

D PHOTO TRANSISTOR P.C.B.(REP1725A-N)

G SENSOR P.C.B.(REP1725A-N)

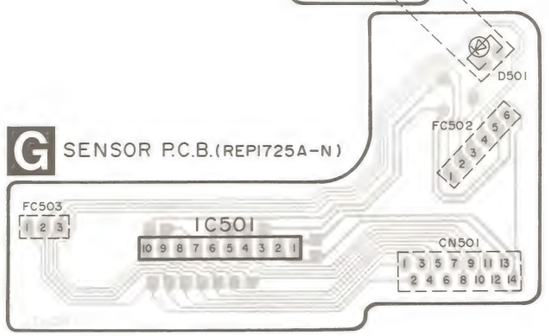

B TRAY MOTOR P.C.B. (REP1725A-N)

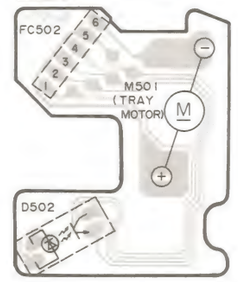

F LOADING MOTOR P.C.B.(REP1724A-N)

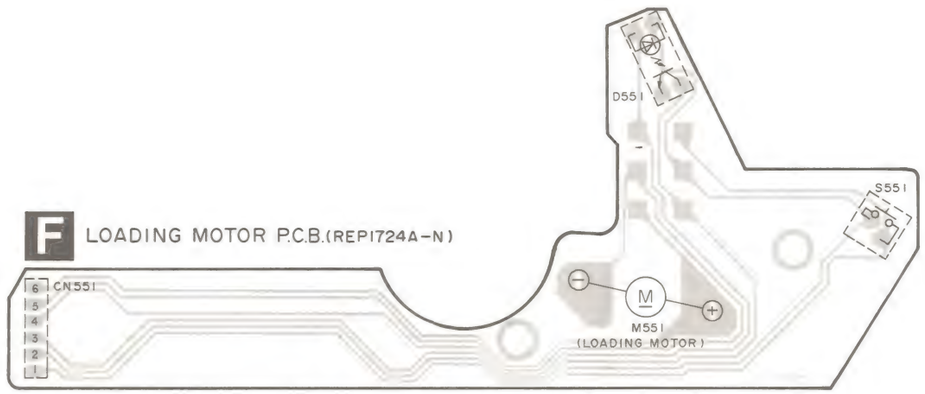

E OPERATION P.C.B.(REP1723C-S)

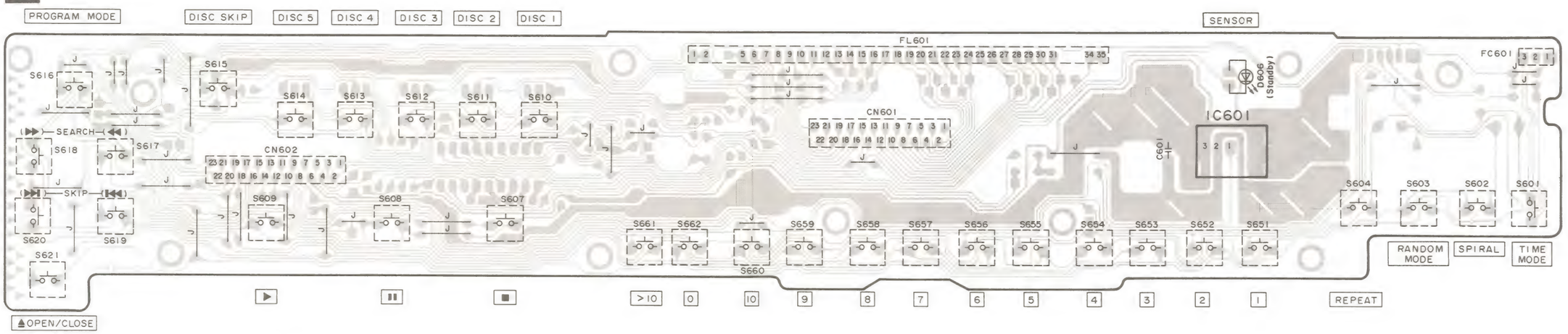

WIRING CONNECTION DIAGRAM

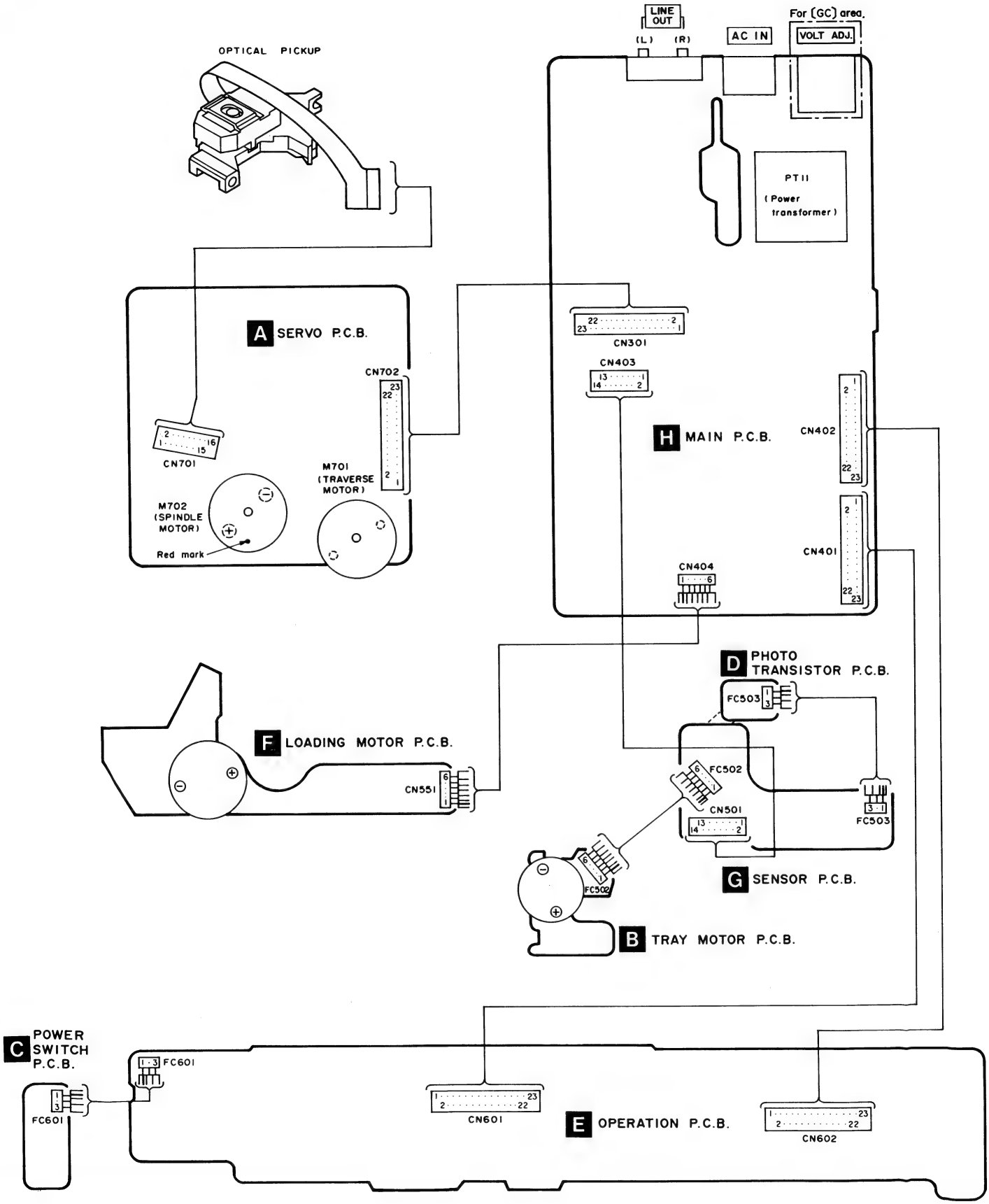

■ REPLACEMENT PARTS LIST

Notes: *Important safety notice:
Components identified by ⚠ mark have special characteristics important for safety.
Furthermore, special parts which have purposes of fire-retardant (resistors), high-quality sound (capacitors), low-noise (resistors), etc. are used.
When replacing any of components, be sure to use only manufacturer's specified parts shown in the parts list.
*The parenthesized indications in the Remarks columns specify the areas. (Refer to the cover page for area.)
Parts without these indications can be used for all areas.
*Warning: This product uses a laser diode. Refer to caution statements on page 2.
*ACHTUNG: Die lasereinheit nicht zerlegen.
Die lasereinheit darf nur gegen einc vom hersteller spezifizierte einheit ausgetauscht werden.

Ref. No.	Part No.	Part Name & Description	Remarks
		INTEGRATED CIRCUIT(S)	
IC11	LM2940T5	REGULATOR	⚠
IC401	UPD78044A058	SYSTEM CONTROL&FL DRIVE	
IC501	BA6247N	MOTOR DRIVE	
IC601	RCDHC-278N	REMOTE CONTROL SENSOR	
IC801	BA4558FHTT1	L. P. F.	
		TRANSISTOR(S)	
Q11	UN4214TA	TRANSISTOR	
Q12	UN4114TA	TRANSISTOR	
Q13	UN4114TA	TRANSISTOR	
Q15	2SD2037EFTA	TRANSISTOR	⚠
Q16	2SD2037EFTA	TRANSISTOR	(GC)⚠
Q21	2SC3311AIQST	TRANSISTOR	⚠
Q22	2SA1309AIQST	TRANSISTOR	⚠
Q31	2SB1238QSTV6	TRANSISTOR	⚠
Q32, 33	2SD1450RTA	TRANSISTOR	
Q41	2SD1862QRTV6	TRANSISTOR	⚠
Q401	2SC3311AIQST	TRANSISTOR	
Q461, 462	UN4215	TRANSISTOR	
Q471	UN4214TA	TRANSISTOR	
Q472	2SC3311AIQST	TRANSISTOR	
Q501	PT381TB	TRANSISTOR	
Q801, 802	2SD1450RTA	TRANSISTOR	
Q851	UN4112	TRANSISTOR	
Q852	UN4212TA	TRANSISTOR	
Q853	UN4112	TRANSISTOR	
		DIODE(S)	
D11-14	RL1N4003N02	DIODE	⚠
D15	MA4091-M	DIODE	⚠
D16	RL1N4003N02	DIODE	
D21, 22	RL1N4003N02	DIODE	⚠
D23, 24	MA4100MTA	DIODE	⚠
D31, 32	RL1N4003N02	DIODE	⚠
D33	MA4270	DIODE	⚠
D34	MA4091-M	DIODE	⚠
D41	MA4062MTA	DIODE	⚠
D42	RL1N4003N02	DIODE	(E, EB, EG)
D42	MA165	DIODE	(GC, GN)
D43	1SS291TA	DIODE	

Ref. No.	Part No.	Part Name & Description	Remarks
D44	RL1N4003N02	DIODE	(E, EB, EG)
D51, 52	MA165	DIODE	⚠
D53	MA4051MTA	DIODE	⚠
D54	MA165	DIODE	
D401-406	MA165	DIODE	
D461	MA4068HTA	DIODE	
D462	MA4056MTA	DIODE	
D501	GL380TB	L. E. D.	
D502	RSQGP1S53V	DIODE	
D551	SG-206S	DIODE	
D606	LN018304P	L. E. D.	
D801, 802	MA165	DIODE	
D852	MA165	DIODE	
		COIL(S)	
L11, 12	RLQX400MT-D	COIL	⚠
		TRANSFORMER(S)	
PT11	RTP1K4B023-X	POWER TRANSFORMER	(E, EB, EG, GN)⚠
PT11	RTP1K4E030-X	POWER TRANSFORMER	(GC)⚠
		COMPONENT COMBINATION(S)	
Z301	BL02RN2R65T2	COMBINATION PART	
		OSCILLATOR(S)	
X401	RSXY4M23M01T	OSCILLATOR(4. 2336MHz)	
		DISPLAY TUBE(S)	
FL601	RSL0170-F	DISPLAY TUBE	
		SWITCH(ES)	
S11	RSR4A003S-1H	VOLTAGE ADJ.	(GC)⚠
S551	RSH1A005	OPEN/CLOSE DETECTOR	
S601	EVQ21405R	TIME MODE	
S602	EVQ21405R	SPIRAL	
S603	EVQ21405R	RANDOM MODE	
S604	EVQ21405R	REPEAT	
S607	EVQ21405R	STOP	
S608	EVQ21405R	PAUSE	

Ref. No.	Part No.	Part Name & Description	Remarks
S609	EVQ21405R	PLAY	
S610	EVQ21405R	DISC 1	
S611	EVQ21405R	DISC 2	
S612	EVQ21405R	DISC 3	
S613	EVQ21405R	DISC 4	
S614	EVQ21405R	DISC 5	
S615	EVQ21405R	DISC SKIP	
S616	EVQ21405R	PROGRAM MODE	
S617	EVQ21405R	R. SEARCH	
S618	EVQ21405R	F. SEARCH	
S619	EVQ21405R	R. SKIP	
S620	EVQ21405R	F. SKIP	
S621	EVQ21405R	OPEN/CLOSE	
S631	EVQ21405R	POWER	
S651	EVQ21405R	PRESET TUNING 1	
S652	EVQ21405R	PRESET TUNING 2	
S653	EVQ21405R	PRESET TUNING 3	
S654	EVQ21405R	PRESET TUNING 4	
S655	EVQ21405R	PRESET TUNING 5	
S656	EVQ21405R	PRESET TUNING 6	
S657	EVQ21405R	PRESET TUNING 7	
S658	EVQ21405R	PRESET TUNING 8	
S659	EVQ21405R	PRESET TUNING 9	
S660	EVQ21405R	PRESET TUNING 10	
S661	EVQ21405R	PRESET TUNING >10	
S662	EVQ21405R	PRESET TUNING 0	
		CONNECTOR(S)	
CN11	RJS1A1101T1	CONNECTOR(1P)	
CN12, 13	RJS1A1101T1	CONNECTOR(1P)	(GC)
CN14	RJS1A1101T1	CONNECTOR(1P)	
CN16-21	RJS1A1101T1	CONNECTOR(1P)	
CN301	RJS1A6823	CONNECTOR(23P)	
CN401, 402	RJS1A6823	CONNECTOR(23P)	
CN403	RJS1A6814	CONNECTOR(14P)	
CN404	RJS1A6606	CONNECTOR(6P)	
CN501	RJS1A6714	CONNECTOR(14P)	
CN551	RJS2A1506	CONNECTOR(6P)	
CN601, 602	RJS1A6223-1	CONNECTOR(23P)	
		JACK(S)	
JK11	SJS9236	AC INLET	(E, EB, EG, GC) ⚠
JK11	SJSD16	AC INLET	(GN) ⚠
JK801	RJH3201N	LINE OUT	
		FLAT CABLE(S)	
FC502	RE20612	FLAT CABLE(6P)	
FC503	RE20613	FLAT CABLE(3P)	
FC601	RE20610	FLAT CABLE(3P)	

Ref. No.	Part No.	Part Name & Description	Remarks
		<SERVO P.C.B.>	
		INTEGRATED CIRCUIT(S)	
IC701	AN8802SCE1V	SERVO AMP.	
IC702	MN66271RA	SERVO PROCESSOR	
IC703	AN8389SE1	MOTOR DRIVE	
		TRANSISTOR(S)	
Q701	2SB709S	TRANSISTOR	
		OSCILLATOR(S)	
X701	RSXZ16M9M01T	OSCILLATOR(16.9344MHz)	
		SWITCH(ES)	
S701	RSM0006-P	REST DETECTOR	
		CONNECTOR(S) AND SOCKET(S)	
CN701	RJU035T016-1	SOCKET(16P)	
CN702	RJS1A6723-1Q	CONNECTOR(23P)	

LOADING MECHANISM PARTS

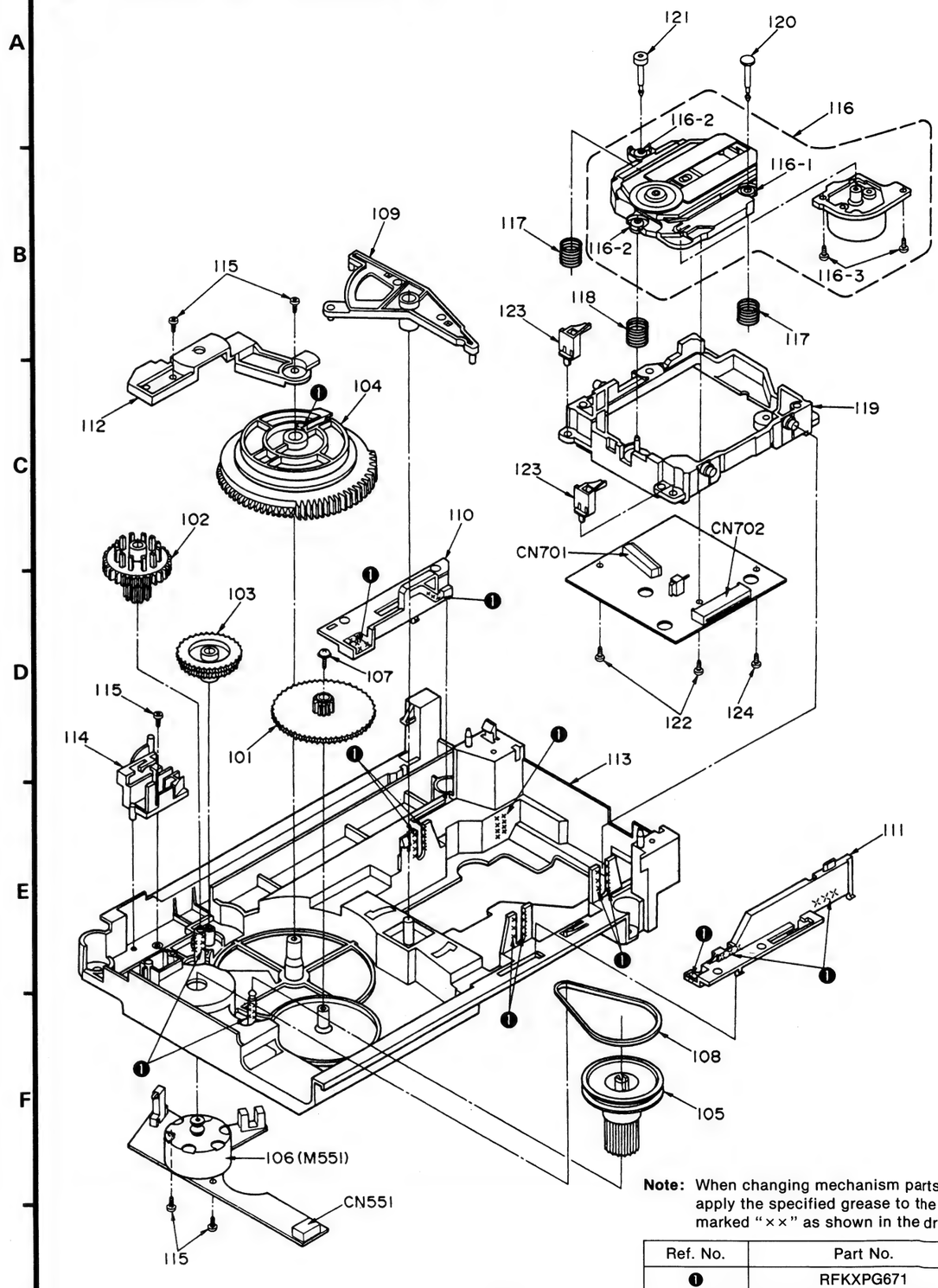

Note: When changing mechanism parts, apply the specified grease to the areas marked "××" as shown in the drawing.

Ref. No.	Part No.
❶	RFKXPG671

■ CABINET PARTS LOCATION

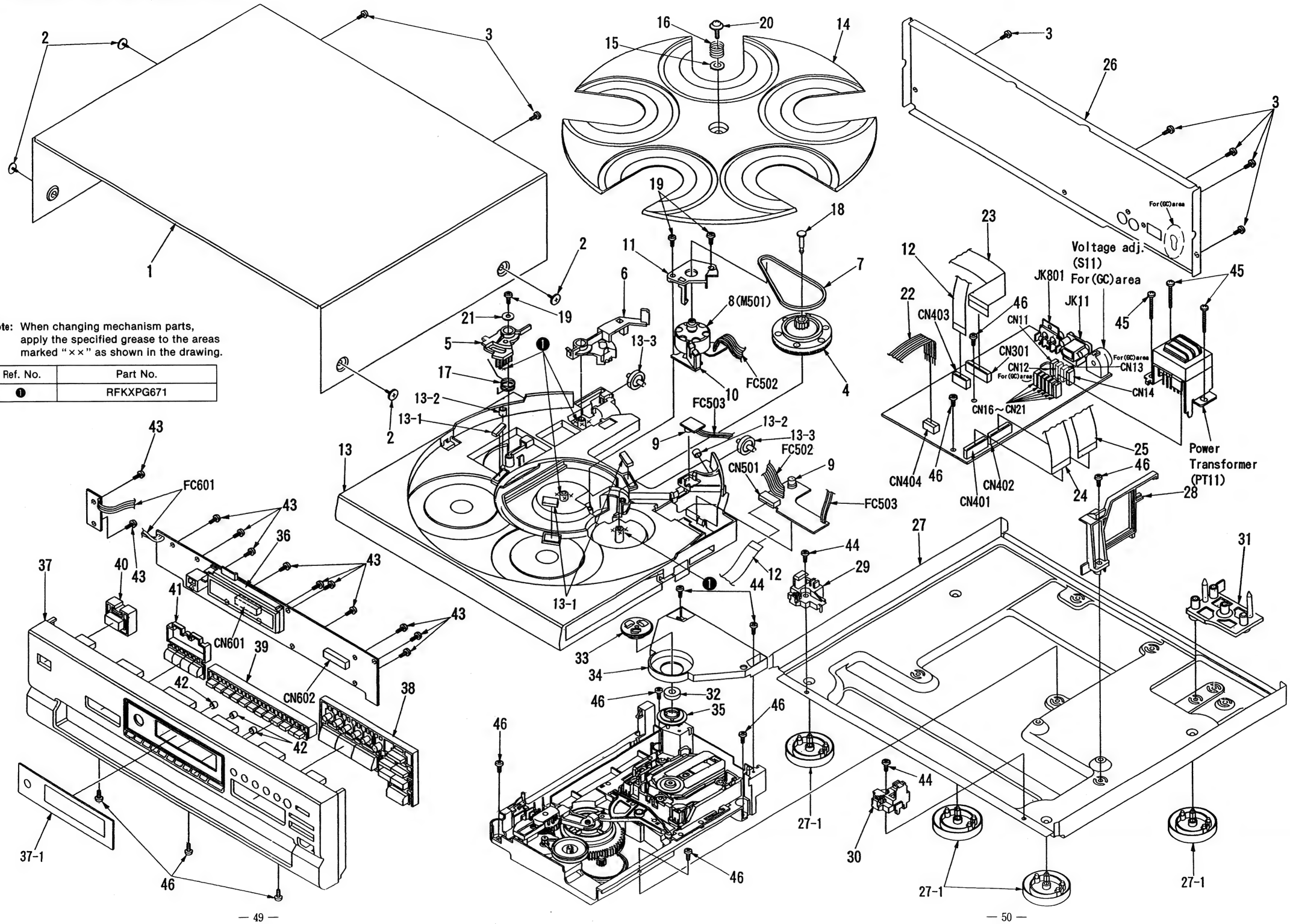

Note: When changing mechanism parts, apply the specified grease to the areas marked "××" as shown in the drawing.

Ref. No.	Part No.
❶	RFKXPG671

REPLACEMENT PARTS LIST

Notes: *The parenthesized indications in the Remarks columns specify the areas. (Refer to the cover page for area.)
Parts without these indications can be used for all areas.
*Warning: This product uses a laser diode. Refer to caution statements on page 2.
*ACHTUNG: Die lasereinheit nicht zerlegen.
Die lasereinheit darf nur gegen einc vom hersteller spezifizierte einheit ausgetauscht werden.

Ref. No.	Part No.	Part Name & Description	Remarks
		CABINET AND CHASSIS	
1	RKM0193-K	CABINET	
2	SNE2129-3	SCREW	
3	XTBS3+8JFZ1	SCREW	
4	RDG0267	REDUCTION GEAR	
5	RDG0268	CLOSE LOCK GEAR	
6	RDG0269-3	OPEN LOCK GEAR	
7	RDV0031	BELT	
8	RFKPLPD667PA	TRAY MOTOR(M501) ASS'Y	
9	RMN0254	LED HOLDER(D501, Q501)	
10	RMN0255	SENSOR HOLDER(D502)	
11	RMN0263	MOTOR HOLDER	
12	REZ0648	FFC(24P)	
13	RFKNLPD1000E	TRAY ASS'Y	(E, EB, EG)
13	RFKNLPD667PA	TRAY ASS'Y	(GC, GN)
13-1	RMF0182	TRAY FELT	
13-2	RMG0200	SILENT RUBBER	
13-3	RMR0546-W	TRAY ROLLER	
14	RGT0019-1	ROTARY TRAY	
15	RHW81001-1	WASHER	
16	RMB0365	SPRING	
17	RME0152-2	LOCK GEAR SPRING	
18	RMS0123-1	RIVET	
19	XTB3+10G	SCREW	
20	XTWS3+10T	SCREW	
21	XWE3D13	SCREW	
22	REZ0623	FLAT CABLE(6P)	
23	REZ0635	FFC(23P)	
24	REZ0636	FFC(23P)	
25	REZ0637	FFC(23P)	
26	RGR0184A1C1	REAR PANEL	(E, EG)
26	RGR0184A1D1	REAR PANEL	(EB, GN)
26	RGR0184B1A	REAR PANEL	(GC)
27	RFKJLPD667PK	CHASSIS ASS'Y	
27-1	RKA0053-A	FOOT	
28	RMR0749-W	CABLE HOLDER	
29	RMR0742-K	TRAY BASE GUIDE(L)	
30	RMR0743-K	TRAY BASE GUIDE(R)	
31	RMR0765-W1	TRANSFORMER BASE	
32	RHM245ZA	MAGNET	
33	RMR0334	FIXED PLATE	
34	RFKNLPD687EK	CLAMP PLATE ASS'Y	
35	RMR0761-W	CLAMPER	
36	RMN0185-1	FL HOLDER	
37	RFKGLPD687EK	FRONT PANEL ASS'Y	

Ref. No.	Part No.	Part Name & Description	Remarks
37-1	RGKD611A-K	FRONT ORNAMENT PLATE	
38	RGU1016-K1	MAIN BUTTON	
39	RGU1019-K	10 KEY BUTTON	
40	RGU1015-K	POWER BUTTON	
41	RGU1017-K	SUB BUTTON	
42	RMG0200	STOPPER TUBE	
43	XTBS26+8J	SCREW	
44	XTB3+10JFZ	SCREW	
45	XTB3+20J	SCREW	
46	XTB3+8JFZ	SCREW	
		LOADING MECHANISM	
101	RDG0270	REDUCTION GEAR	
102	RDG0271	DRIVE GEAR(1)	
103	RDG0272	DRIVE GEAR(2)	
104	RDKD025	DRIVE CAM	
105	RDP0050	PULLEY GEAR	
106	RFKPLPD667PB	LOADING MOTOR(M551) ASS'Y	
107	RHD26019	SCREW	
108	RMG0268-K	BELT	
109	RML0334	DRIVE LEVER	
110	RMM0117	SLIDE PLATE(1)	
111	RMM0118	SLIDE PLATE(2)	
112	RMR0746-W	REINFORCING PLATE	
113	RFKNLPD667PB	MECHANISM BASE ASS'Y	
114	RXQ0346-1	SLIDER PLATE	
115	XTB3+10JFZ	SCREW	
116	RAE0113Z	TRAVERSE DECK ASS'Y	
116-1	SHGD112	FLOATING RUBBER(1)	
116-2	SHGD113-1	FLOATING RUBBER(2)	
116-3	SNSD38	SCREW	
117	RME0109	FLOATING SPRING(1)	
118	RME0142	FLOATING SPRING(2)	
119	RMR0698-K	TRAVERSE CHASSIS	
120	RMS0123-1	TRAVERSE FIXED PIN(1)	
121	RMS0350	TRAVERSE FIXED PIN(2)	
122	XTV2+6G	SCREW	
123	RMX0094	TRAY HOLDER	
124	XTN2+6G	SCREW	

■ RESISTORS AND CAPACITORS

Notes : * Capacity values are in microfarads (uF) unless specified otherwise, P=Pico-farads (pF) F=Farads (F)
* Resistance values are in ohms, unless specified otherwise, 1K=1,000 (OHM), 1M=1,000k (OHM)

Ref. No.	Part No.	Values & Remarks
		RESISTORS
R11, 12	ERDS2TJ181T	1/4W 180 E, EB, EG, GN
R11, 12	ERDS2TJ271	1/4W 270 GC
R13-16	ERDS2TJ1R0	1/4W 1.0 GC
R17	ERQ16NKWR15E	1W 0.15 E, EB, EG⚠
R21, 22	ERDS2TJ122	1/4W 1.2K E, EB, EG, GN
R21, 22	ERDS2TJ182	1/4W 1.8K GC
R31	ERDS2TJ123	1/4W 12K
R32, 33	ERDS2TJ103	1/4W 10K
R34	ERDS2TJ101	1/4W 100 E, EB, EG
R41	ERDS2TJ221	1/4W 220 E, EB, EG
R41	ERDS2TJ471	1/4W 470 GC, GN
R42	ERDS2TJ221	1/4W 220 E, EB, EG
R43	ERDS2TJ221	1/4W 220 E, EB, EG
R44, 45	ERDS2TJ4R7T	1/4W 4.7 E, EB, EG
R51, 52	ERDS2TJ122	1/4W 1.2K
R401-407	ERDS2TJ472	1/4W 4.7K
R409	ERDS2TJ102	1/4W 1K
R410	ERDS2TJ103	1/4W 10K
R411	ERDS2TJ472	1/4W 4.7K
R412	ERDS2TJ223	1/4W 22K
R413	ERDS2TJ103	1/4W 10K
R414	ERDS2TJ471	1/4W 470
R415	ERDS2TJ103	1/4W 10K
R416	ERDS2TJ102	1/4W 1K
R421	ERDS2TJ472	1/4W 4.7K
R461	ERDS2EJ121	1/4W 120 E, EB, EG
R461	ERDS2TJ271	1/4W 270 GC, GN
R462	ERDS2TJ221	1/4W 220
R463	ERDS2EJ121	1/4W 120 E, EB, EG
R471	ERDS2TJ103	1/4W 10K
R472	ERDS2EJ121	1/4W 120
R803, 804	ERDS2TJ224T	1/4W 220K
R805, 806	ERDS2TJ822	1/4W 8.2K
R807, 808	ERDS2TJ123	1/4W 12K
R809-812	ERDS2TJ333	1/4W 33K
R813-816	ERDS2TJ102	1/4W 1K
R817, 818	ERDS2TJ473	1/4W 47K
R819, 820	ERDS2TJ100	1/4W 10
R851	ERDS2TJ222	1/4W 2.2K
R852	ERDS2TJ102	1/4W 1K
		CAPACITORS
C11	ECBT1E103ZF	25V 0.01U
C12	ECA1CM332B	16V 3300U ⚠
C15	ECBT1H102KB5	50V 1000P
C16	ECA1AM471B	10V 470U
C17	RCE0JKA101BV	6.3V 100U
C20	ECBT1E103ZF	25V 0.01U E, EB, EG, GN
C20	ECBT1H102KB5	50V 1000P GC
C21, 22	ECA1VM101B	35V 100U
C25, 26	ECBT1H102KB5	50V 1000P
C30	ECBT1E103ZF	25V 0.01U GC, GN
C31, 32	ECA1JM470B	63V 47U
C33	ECBT1H102KB5	50V 1000P
C34	ECBT1H102KB5	50V 1000P GC
C41	ECBT1H102KB5	50V 1000P
C42	RCE0JKA101BV	6.3V 100U
C301	ECBT1C103NS5	16V 0.01U
C401	ECBT1C103NS5	16V 0.01U
C402	ECA0JM471B	6.3V 470U
C403	ECEA1HKA010B	50V 1U
C404	ECEA1EKA4R7B	25V 4.7U
C405	ECBT1C103NS5	16V 0.01U
C406	ECEA1HKA010B	50V 1U
C421	ECBT1C103NS5	16V 0.01U
C461	RCE1AKA470BG	10V 47U
C462	ECBT1C103NS5	16V 0.01U
C601	ECFR1E104ZF5	25V 0.1U
C801, 802	RCE1AKA470BG	10V 47U
C805-808	ECCR1H391J5	50V 390P
C809, 810	RCE0JKA470BG	6.3V 47U
C811, 812	ECBT1H102KB5	50V 1000P
		<SERVO P.C.B.>
		RESISTORS
R701	ERJ6GEYJ100	1/10W 10
R702	ERJ6GEYJ471V	1/10W 470
R703	ERJ6GEYJ823	1/10W 82K
R704	ERJ6GEYJ102A	1/10W 1K
R705	ERJ6GEYJ103V	1/10W 10K
R706	ERJ6GEYJ102A	1/10W 1K
R707	ERJ6GEYJ473V	1/10W 47K
R708	ERJ6GEYJ104V	1/10W 100K
R709	ERJ6GEYJ683V	1/10W 68K
R711	ERJ6GEYJ154V	1/10W 150K
R712	ERJ6GEYJ221V	1/10W 220
R717-720	ERJ6GEYJ102A	1/10W 1K
R721	ERJ6GEYJ101V	1/10W 100
R722	ERJ6GEYJ563V	1/10W 56K
R723	ERJ6GEYJ182V	1/10W 1.8K
R724	ERJ6GEYJ333V	1/10W 33K
R725	ERJ6GEYJ472V	1/10W 4.7K
R726	ERJ6GEYJ473V	1/10W 47K
R727	ERJ6GEYJ103V	1/10W 10K
R728	ERJ6GEYJ392V	1/10W 3.9K
R730	ERJ6GEYJ331V	1/10W 330
R731	ERJ6GEYJ392V	1/10W 3.9K
R734-736	ERJ6GEYJ101V	1/10W 100
R738	ERJ6GEYJ223V	1/10W 22K
R739	ERJ6GEYJ681V	1/10W 680
R741-743	ERJ6GEYJ562V	1/10W 5.6K
R744	ERJ6GEYJ103V	1/10W 10K
R745	ERJ6GEYJ155V	1/10W 1.5M
R748	ERJ6GEYJ182V	1/10W 1.8K
R749	ERJ8GEYJ103V	1/8W 10K
		CHIP JUMPERS
R714	ERJ6GEY0R00A	CHIP JUMPER
J701-704	ERJ8GEY0R00A	CHIP JUMPER
J707-709	ERJ8GEY0R00A	CHIP JUMPER
J714-717	ERJ8GEY0R00A	CHIP JUMPER
J721	ERJ6GEY0R00A	CHIP JUMPER
J724-726	ERJ6GEY0R00A	CHIP JUMPER
		CAPACITORS
C701	ECEA0JKA220	6.3V 22U
C702	ECEA1HKA010I	50V 1U
C703	ECEA0JKA101I	6.3V 100U
C704	ECUZNE104MBN	25V 0.1U
C705	ECEA1HKA010I	50V 1U
C706	ECUE1H101JCN	50V 100P
C707	ECUV1E273KBN	25V 0.027U
C708	ECUE1H472KBN	50V 4700P
C709	ECUE1C473KBN	16V 0.047U
C710	ECUE1H152KBN	50V 1500P
C711, 712	ECUWNE104ZFN	25V 0.1U
C713	ECUV1C104MBM	16V 0.1U
C714	ECEA0JKA101I	6.3V 100U
C715	ECEA0JKA470I	6.3V 47U
C716	ECUE1H561KBN	50V 560P
C717	ECUWNE104ZFN	25V 0.1U
C718	ECUV1C224KBM	16V 0.22U
C721, 722	ECUE1H270JCN	50V 27P
C723	ECEA1AKA221I	10V 220U
C724	ECUV1C104MBM	16V 0.1U
C725, 726	ECUE1H102KBN	50V 1000P
C727, 728	ECEA1HPK010I	50V 1U
C730	ECUWNE104ZFN	25V 0.1U
C731, 732	ECEA0JK221I	6.3V 220U
C733	ECUZNE104MBN	25V 0.1U

Ref. No.	Part No.	Values & Remarks
C734	ECEA1AKA221I	10V 220U
C735-737	ECUWNE104ZFN	25V 0.1U
C738	ECUV1C154KBN	16V 0.15U
C742	ECUV1E273KBN	25V 0.027U

Ref. No.	Part No.	Values & Remarks
C743	ECUWNE104ZFN	25V 0.1U
C744	ECUE1E822KBN	25V 8200P
C745	ECUE1C473MBN	16V 0.047U
C746	ECUE1HD50DCN	50V 5P

Ref. No.	Part No.	Values & Remarks
C747	ECUE1H222KBN	50V 2200P
C748	ECUV1H471KBM	50V 470P

■ REPLACEMENT PARTS LIST

Notes: *Important safety notice:
Components identified by ⚠ mark have special characteristics important for safety.
Furthermore, special parts which have purposes of fire-retardant (resistors), high-quality sound (capacitors), low-noise (resistors), etc. are used.
When replacing any of components, be sure to use only manufacturer's specified parts shown in the parts list.
*Warning: This product uses a laser diode. Refer to caution statements on page 2.
*ACHTUNG: Die lasereinheit nicht zerlegen.
Die lasereinheit darf nur gegen einc vom hersteller spezifizierte einheit ausgetauscht werden.
*The "(SF)" mark denotes the standard part.
*[V] indicates in Remarks columns parts that are supplied by Video Recorder Division.

Ref. No.	Part No.	Part Name & Description	Remarks
		PACKING MATERIAL	
P1	RPG2327	PACKING CASE	(E, EG, GC)
P1	RPG2328	PACKING CASE	(EB)
P1	RPG2365	PACKING CASE	(GN)
P2	RPN0760	CUSHION	(E, EG, GC)
P2	RPN0772	CUSHION	(EB, GN)
P3	SPP730	PROTECTION BAG (UNIT)	
P4	RPF0139	PROTECTION BAG (F. B.)	
P5	RPH0032	MIRROR SHEET	(EB, GN)
		ACCESSORIES	
A1	RFKSLPD687E	INSTRUCTION MANUAL ASS'Y	(E)
A1	RQT2773-B	INSTRUCTION MANUAL	(EB, GN)
A1	RFKSLPD687EG	INSTRUCTION MANUAL ASS'Y	(EG)
A1	RFKSLPD687GC	INSTRUCTION MANUAL ASS'Y	(GC)
A2	RQA0013	WARRANTY CARD	(E, EB, EG)
A2	RQX7433ZA	WARRANTY CARD	(GN)
A3	RQC80169	SERVICENTER LIST	
A4	RJA0019-2K	AC POWER SUPPLY CORD	(E, EG, GC) ⚠ (SF)
A4	VJA0733	AC POWER SUPPLY CORD	(EB) ⚠ (SF) [V]

Ref. No.	Part No.	Part Name & Description	Remarks
A4	RJA0036-K	AC POWER SUPPLY CORD	(GN) ⚠ (SF)
A5	SJP2249-3	STEREO CONNECTION CABLE	
A6	RQLA0134	VOLTAGE CAUTION LABEL	(GC)
A7	SJP5213-2	POWER PLUG ADAPTOR	(GC) ⚠
		<GREASE OR JIG/TOOL>	
		TEST DISC	
SA1	SZZP1054C	PLAYABILITY TEST DISC	
SA2	SZZP1056C	UNEVEN TEST DISC	
		ALLEN WRENCH	
SA3	SZZP1101C	ALLEN WRENCH (M2.0)	
		LOCK PAINT	
SA4	RZZ0L01	LOCK PAINT	
		GREASE	
SA5	RFKXPG671	MOLYCOAT GREASE PG671	

■ PACKAGING

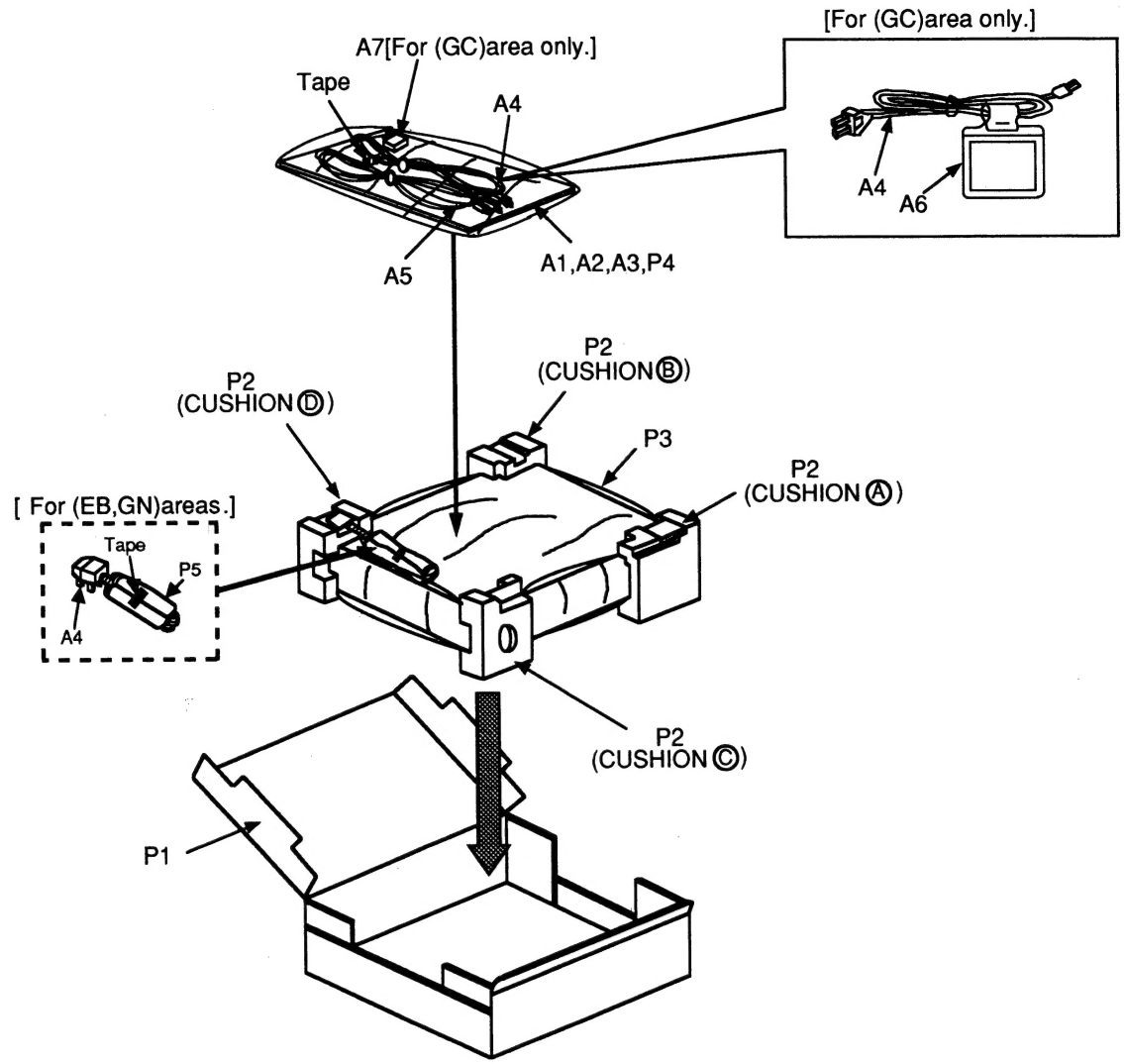

[CUSHION Ⓐ, Ⓑ, Ⓒ, Ⓓ : Part No.RPN0760:For (E,EG,GC) areas.
: Part No.RPN0772:For (EB,GN) areas.]

Printed in Japan
H950210500 NH/YU/TM

ORDER NO. AD9502066A2

Service Manual

COMPACT disc DIGITAL AUDIO DIGITAL MASH* multi-stage noise shaping

Compact Disc Changer

SL-PD887

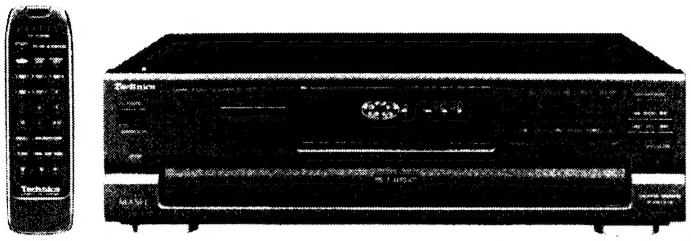

※ • Technics (or Panasonic) developed the world's first MASH type DAC and ADC. MASH technology was invented by NTT (LSI Labs).
• MASH is a trademark of NTT.

Colour

(K) ... Black Type

Area

Suffix for Model No.	Area	Colour
(E)	Europe.	(K)
(EB)	Great Britain.	
(EG)	Germany and Italy.	

Please file and use this manual together with the service manual for Model No. SL-PD687, Order No. AD9502043C8.

Note: • This service manual is provided to indicate the main differences between the original model No. SL-PD687 (EB) and the subsequent model No. SL-PD887 (E, EB, EG).

ADDITION

■ ACCESSORIES (SL-PD687 Service Manual of page 3.)

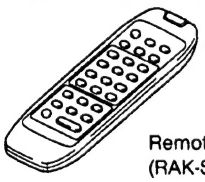

Remote control transmitter
(RAK-SL404WH)..... 1 pc.

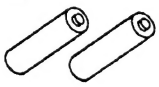

Batteries "AAA" (R03)
for remote control transmitter .... 2 pcs.

Note: These are available on sale route.

■ SCHEMATIC DIAGRAM

(SL-PD687 Service Manual of page 38.)

E OPERATION CIRCUIT

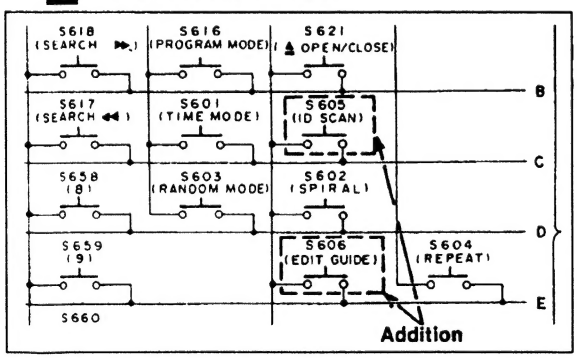

■ PRINTED CIRCUIT BOARD

(SL-PD687 Service Manual of page 44.)

E OPERATION P.C.B. (REP1723E-S)

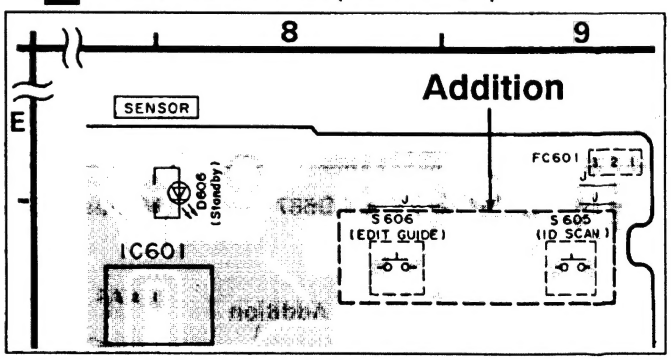

⚠ WARNING

This service information is designed for experienced repair technicians only and is not designed for use by the general public. It does not contain warnings or cautions to advise non-technical individuals of potential dangers in attempting to service a product. Products powered by electricity should be serviced or repaired only by experienced professional technicians. Any attempt to service or repair the product or products dealt with in this service information by anyone else could result in serious injury or death.

Technics®

© 1995 Matsushita Electric Industrial Co., Ltd.
All rights reserved. Unauthorized copying and distribution is a violation of law.

CHANGES

■ CHANGE IN REPLACEMENT PARTS LIST (SL-PD687 Service Manual of pages 46, 47, 51, 53.)

Note: • Mentioned in this parts list is only those different from Model No. SL-PD687 (EB).
All other parts are the same as for SL-PD687 (EB).
• Important safety notice:
Components identified by △ mark have special characteristics important for safety.
When replacing any of components, be sure to use only manufacturer's specified parts shown in the parts list.
• The parenthesized indications in the Remarks columns specify the areas. (Refer to the cover page for area)
Parts without these indications can be used for all areas.
• Remote Control Ass'y: Supply period for three years from termination of production.
• The "(SF)" mark denotes the standard part.
• [V] Indicates in Remarks columns parts that are supplied by Video Recoder Division.

Ref. No.	Change of Part No. SL-PD687 (EB) → SL-PD887 (E, EB, EG)		Part Name & Description	Remarks
SWITCH(ES)				
S605	——	**EVQ21405R**	ID SCAN	Addition
S606	——	**EVQ21405R**	EDIT GUIDE	Addition
CABINET AND CHASSIS				
26	RGR0184A1D1	**RGR0184A1K1**	REAR PANEL	(E, EG)
		RGR0184A1L1	REAR PANEL	(EB)
37	RFKGLPD687EK	**RFKGLPD887EK**	FRONT PANEL ASS'Y	
37-1	RGK0611A-K	**RGK0611D-K**	FRONT ORNAMENT PLATE	
38	RGU1016-K1	**RGU1016-K**	MAIN BUTTON	
PACKING MATERIAL				
P1	RPG2328	**RPG2370**	PACKING CASE	(E, EG)
		RPG2371	PACKING CASE	(EB)
P2	RPN0772	**RPN0781**	CUSHION	(E, EG)
		RPN0772	CUSHION	(EB)
P5	RPH0032	——	——	(E, EG) Deletion
		RPH0032	MIRROR SHEET	(EB)
P6	——	**RPQ0535**	PAD	Addition
ACCESSORIES				
A1	RQT2773-B	**RFKSLPD887E**	INSTRUCTION MANUAL ASS'Y	(E)
		RFKSLPD887EB	INSTRUCTION MANUAL ASS'Y	(EB)
		RFKSLPD887EG	INSTRUCTION MANUAL ASS'Y	(EG)
A4	VJA0733	**RJA0019-2K**	AC POWER SUPPLY CORD	(E, EG) △ (SF)
		VJA0733	AC POWER SUPPLY CORD	(EB) △ (SF) [V]
A8	——	**RAK-SL404WH**	REMOTE CONTROL TRANSMITTER	Addition
A8-1	——	**RKK0080-K**	BATTERY COVER, FOR R/C TRANSMITTER	Addition
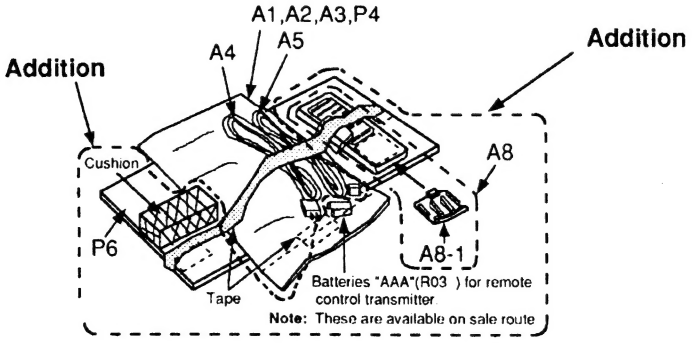
■ PACKAGING (SL-PD687 Service Manual of page 54.)